Linear actuators

CAR & CAT series



Contents

3 CAR linear actuator range
4 CAR 22, 32, 40
5 CAP 32
6 CARN 32
7 CCBR 32
8 Performance (CAR range)
10 Motors / motor data
12 Calculations
16 Accessories
20 Options
21 Type keys (CAR range; CAR 22, 32, 40, CAP 32)
23 CAT linear actuator range
28 Performance (CAT range)
30 Type keys (CAT range; CAT 33H, 33, 32B)
33 CAT actuator with potentiometer
36 Type keys for CAT actuator with potentiometer; CAP 43A, 43B

The SKF® brand now stands for more than ever before, and means more to you as a valued customer.

While SKF maintains its leadership as the hallmark of quality bearings throughout the world, new dimensions in technical advances, product support and services have evolved SKF into a truly solutions-oriented supplier, creating greater value for customers.

These solutions encompass ways to bring greater productivity to customers, not only with breakthrough application-specific products, but also through leading-edge design simulation tools and consultancy services, plant asset efficiency maintenance programmes, and the industry's most advanced supply management techniques.

The SKF brand still stands for the very best in rolling bearings, but it now stands for much more.

SKF – the knowledge engineering company

The CAR actuator range

The CAR range of industrial actuators offers a unique standard of performance, durability and reliability.

The compact design incorporates well-proven parts, such as the SKF high efficiency ball screw, a sturdy gearbox assembly and high quality DC and AC-motors. All to give the best possible performance with extensive operational life. Individual application requirements can easily be matched thanks to the modular design concept.

A vast number of motors, gear ratios and other options can be combined to give the actuator the required characteristics. The CAR range is available in three sizes, CAR 22, CAR 32 and CAR 40, with loads of up to 6 000 N.

Three special versions of the CAR 32 actuator are available:

- CAP 32, with integrated feedback potentiometer.
- CARN 32, with gearbox input shaft for external drive source.
- CCBR 32, without motor and gearbox.

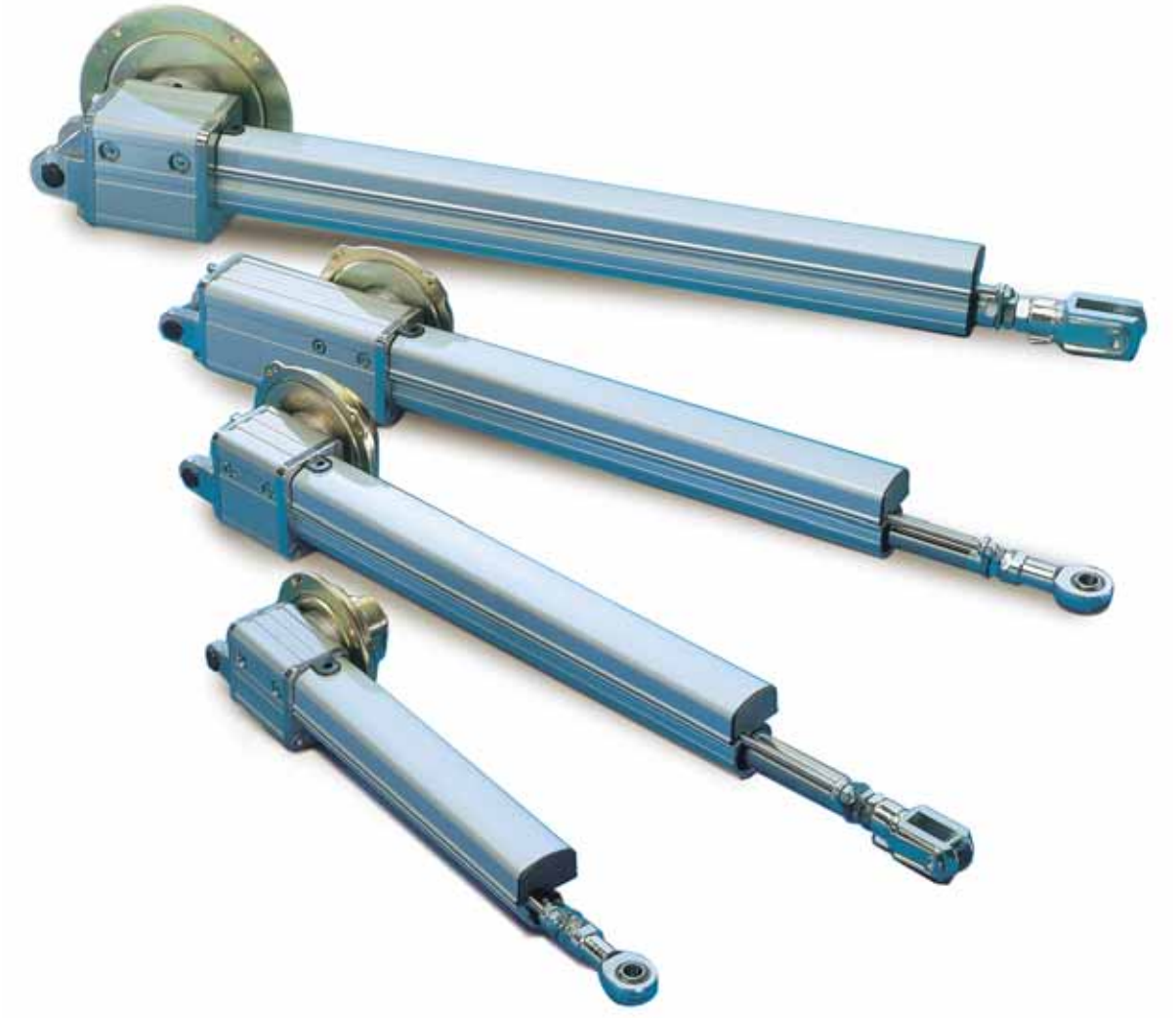

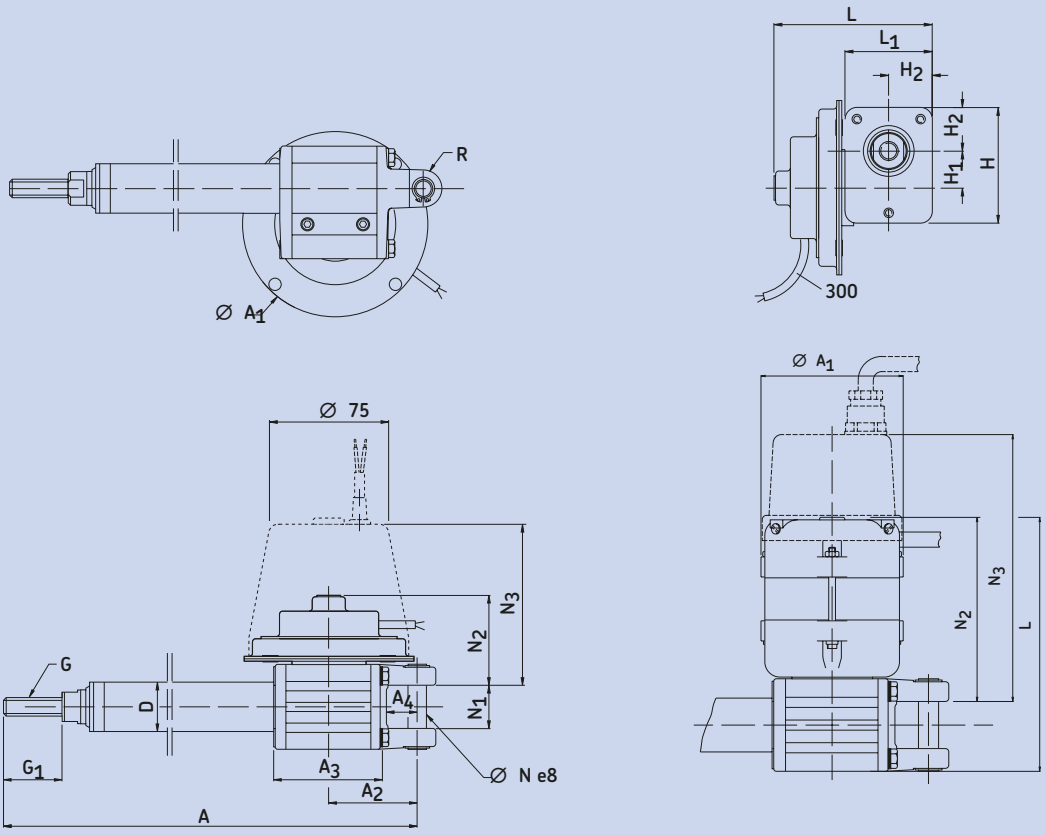

Actuator	Dimensions A	A_2	A_3	A_4	D	G	G_1	H	H_1	H_2	L_1	N	N_1	R
	mm													
CAR 22	S+205	49	66	16	22	M10×1,5	35	60	16,5	23	46	10	26	9
CAR 32	S+218	57	71	20	32	M12×1,75	38	73	23	27,5	55	12	28	12
CAR 40	S+263	75	100	25	40	M16×2	53	97	29	40	80	16	40	19

S=Stroke in mm

Motor	A_1	L	N_2	N_3
	mm			
D12B	104	86	53	-
D12C	120	100	58	-
D24B	104	86	53	-
D24C	120	100	58	-
D24CW	120	100	58	-
D24CS	120	100	58	-
D24CB	120	142	58	100
D24D	150	127	75	-
D24DS	150	127	87	-
D24DB	150	181	75	121
E110C	97	150	108	-
E110CB	97	198	-	156
E110D	119	200	141	-
E110DB	119	248	-	189
E220C	97	150	108	-
E220CB	97	198	-	156
E220D	119	200	141	-
E220DB	119	248	-	189

Actuator	Stroke S	Weight
	mm	kg
CAR 22	50	1,2
	100	1,3
	150	1,4
	200	1,5
	300	1,6
CAR 32	50	2,1
	100	2,2
	200	2,4
	300	2,7
	500	3,2
	700	8,4
CAR 40	100	5,8
	300	6,7
	500	7,6
	700	8,4

The CAR actuator is manufactured in three versions with capacities up to 6 000 N. The CAR 32 and 40 versions can be supplied with three gear ratios (1, 2, 4) while the CAR 22 is available with two ratios (1, 2). With gear 1, the CAR actuator is self-locking within the dynamic load range, when used together with DC-motors. Actuators fitted with gear 2 or 4 are self-locking within the dynamic load range provided that a motor with brake is fitted.

CAR actuators equipped with AC-motors are self-locking within the dynamic load range providing motors with brakes are fitted.

The friction clutch protects the actuator and the mechanism to which it is fitted from damage caused by dynamic overload.

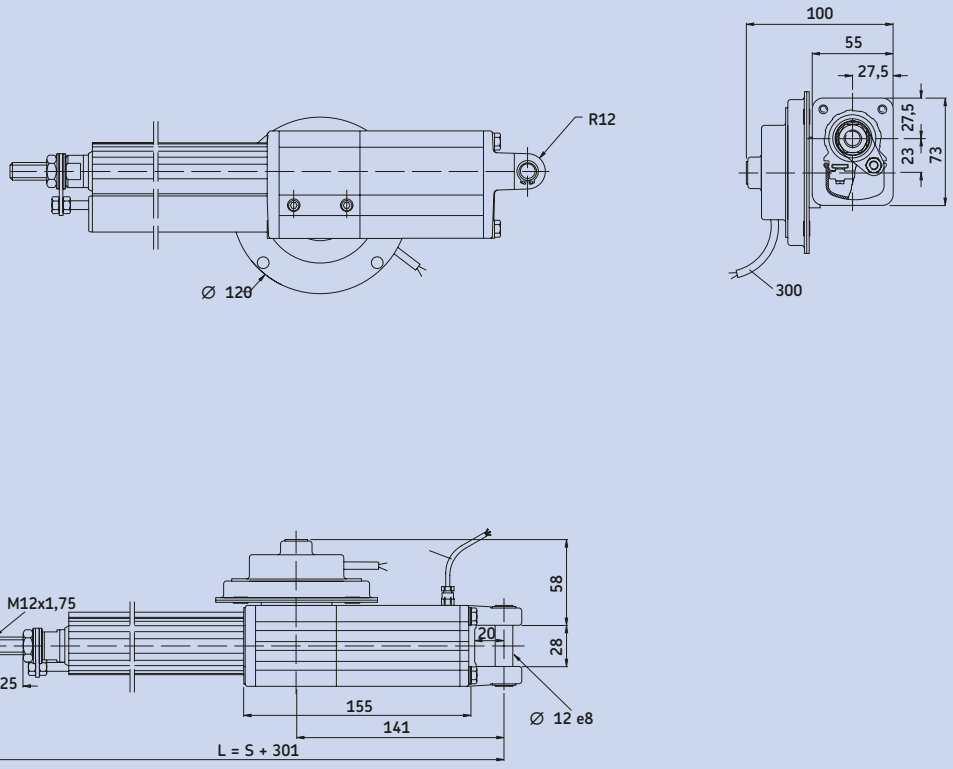

The CAP 32 actuator is fitted with a potentiometer which indicates the position of the actuator. This unit is, therefore, suitable for use in situations where it is necessary to know the current position of the actuator, either for manual or automatic control. The CAP 32 has a built in 10 kΩ potentiometer which is linked to the ball screw. This provides an analogue signal representing the present position of the adjustment tube. The CAP 32 is fitted, as standard, with CAXB limit switch. Other performance values are identical with CAR 32.

Positioning accuracy Gear	Accuracy
	mm
1	±1
2	±2
4	±4

Actuator	Stroke S	Weight
	mm	kg
CAP 32	50	2,9
	100	3,3
	200	3,7
	300	4,1
	500	4,5
	700	5,0

At constant load and direction of load a significantly higher accuracy can be achieved. Please consult SKF for further information.

Ordering key - see page 21.

CARN 32 actuator without motor

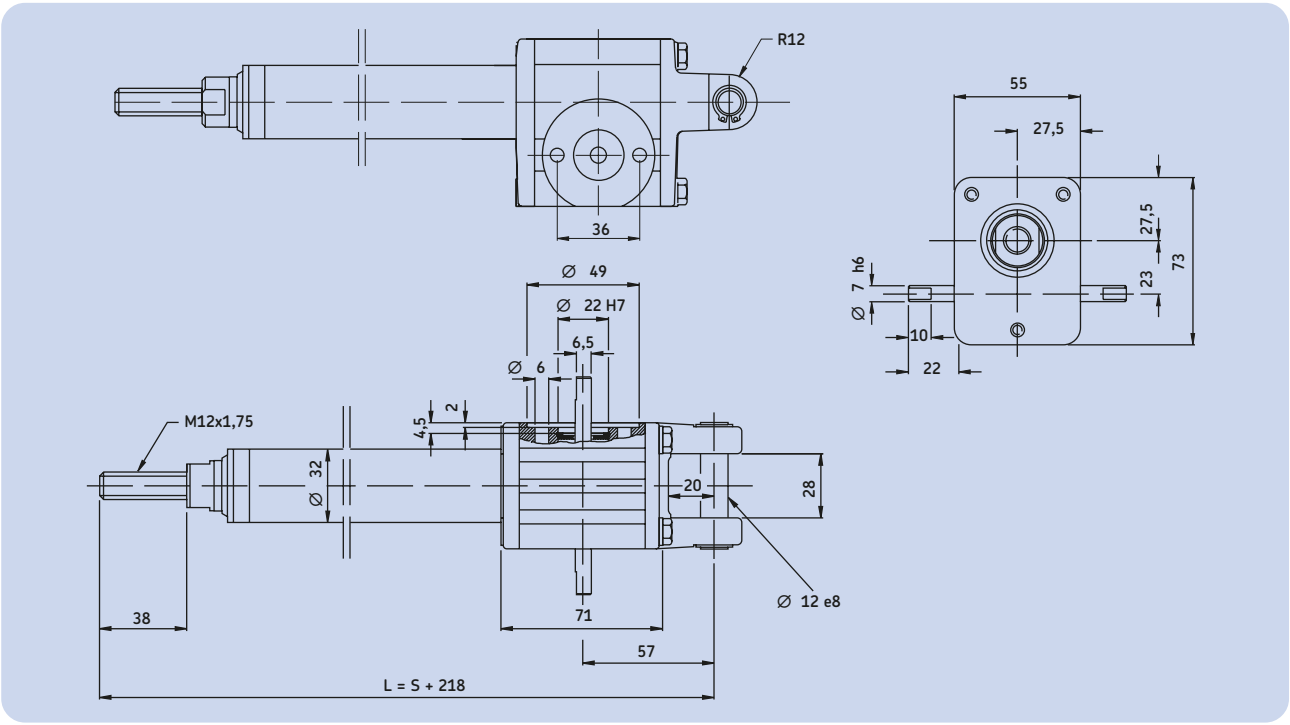

An external drive can be connected to CARN 32. This could be a pneumatic motor, a manual drive unit or an electric motor, linked to the gearbox input shaft. The CARN 32 actuator can also be operated in parallel with two, or more, actuators. The linear speed is determined by the input rotary speed, as shown in the diagram below. A diagram also shows the torque required for any given load.

Actuator	Stroke S	Weight
	mm	kg
CARN 32	50	0,8
	100	1,0
	200	1,5
	300	2,2
	500	2,7
	700	3,3

Designation Type code	Gear ratio	Ball screw lead
		mm
CARN 32xSx1	1:25,0	4
CARN 32xSx2	1:12,5	4
CARN 32xSx4	1:6,25	4

Linear speed “V” as a function of input speed

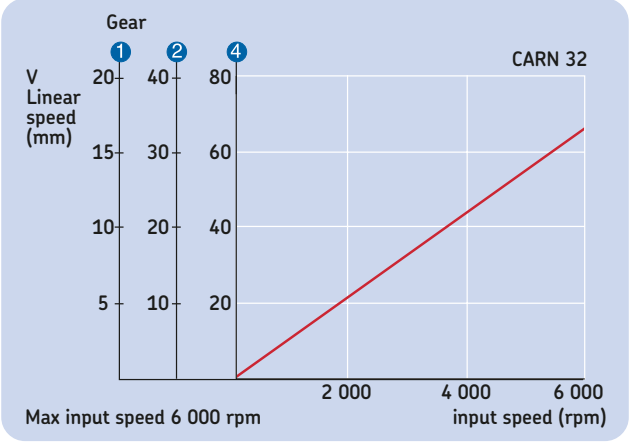

Available force “F” as a function of applied torque

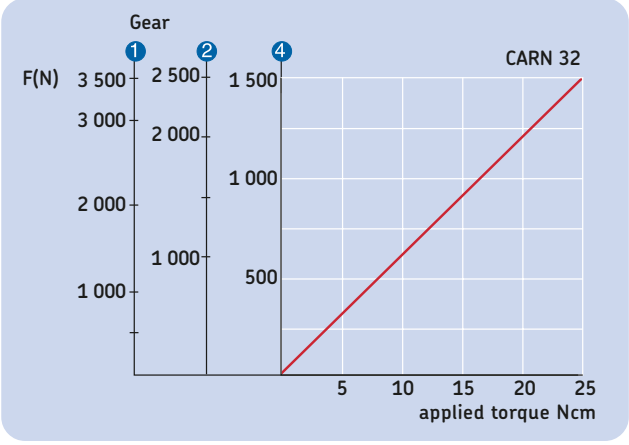

CCBR 32 actuator without motor

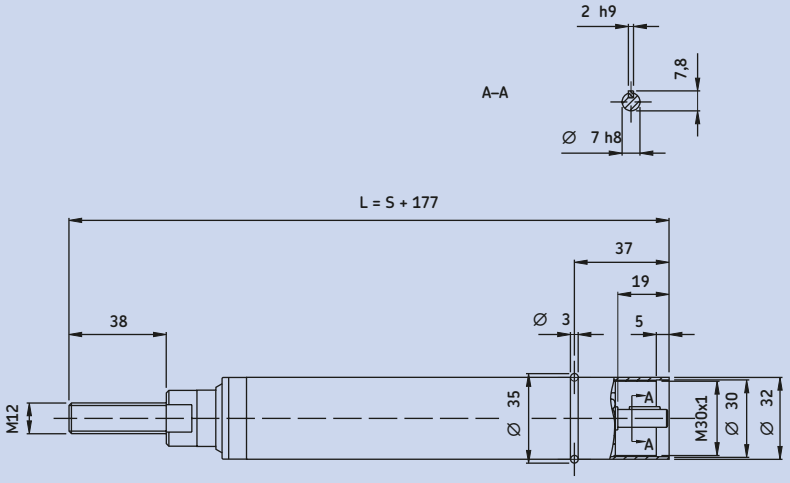

The CCBR 32 is an actuator with no motor or gearbox. It is driven directly by the ball screw and is therefore of small external dimensions. Direct drive offers very accurate positioning. The SKF ball screw provides a high level of efficiency.

The linear speed is determined by the input rotary speed, as shown in the diagram below. A diagram also shows the torque required for any given load.

If required, the CAXB 32 limit switch can be mounted on the ball screw cylinder. The front mounting attachment described in page 16 is also suitable for CCBR 32. A steel ring to be mounted at the end of the cylinder is supplied with CCBR 32. The drawing shows the ring fitted to the cylinder.

Actuator	Stroke S	Weight
	mm	kg
CCBR 32	50	1,1
	100	1,2
	200	1,3
	300	1,3
	500	1,4
	700	1,5

Designation Type code	Maximum dyn. load	Maximum stat. load	Ball screw lead
	N	N	mm
CCBR 32xS	2 500	5 400	4

Linear speed “V” as a function of input speed

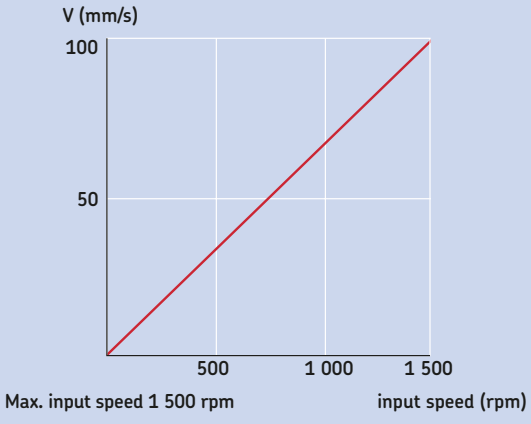

Available force “F” as a function of applied torque

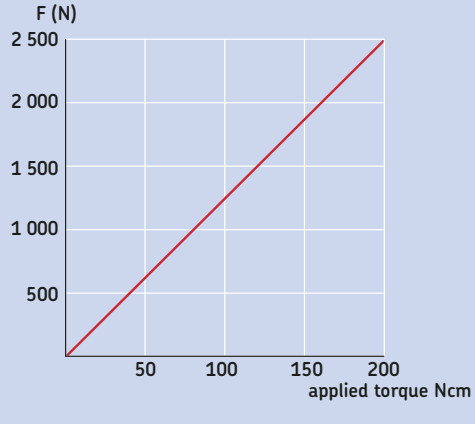

Performance

DC-motors

Motor Actuator	Maximum dynamic load	Maximum static load	Linear speed	Current consumption
	N	N	mm/s	A
D24B				
CAR 22xSx1	1 500	2 200	15-10	5
CAR 22xSx2	1 000	2 200	30-20	5
D24C/D24CS/D24CB				
CAR/CAP 32xSx1	3 500	5 400	5-10	8
CAR/CAP 32xSx2	2 500	5 400	30-20	8
CAR/CAP 32xSx4	1 500	5 400	60-40	8
D24CW				
CAR 32xSx1	3 500	5 400	9-5	5
CAR 32xSx2	2 500	5 400	18-10	5
CAR 32xSx4	1 500	5 400	34-24	5
D24D/D24DS/D24DB				
CAR 40xSx1	6 000	8 700	15-10	16
CAR 40xSx2	4 000	8 700	30-20	16
CAR 40xSx4	2 000	8 700	60-40	16
D12B				
CAR 22xSx1	1 500	2 200	15-10	9
CAR 22xSx2	1 000	2 200	30-20	9
D12C				
CAR/CAP 32xSx1	2 500	5 400	15-10	13
CAR/CAP 32xSx2	2 000	5 400	30-20	13
CAR/CAP 32xSx4	1 000	5 400	60-40	13

AC-motors

Motor Actuator	Maximum dynamic load			Maximum static load	Linear speed
	N			N	mm/s
E220C/E220CB	**6 µF**	**4 µF**	**3 µF**		
CAR/CAP 32xSx1	3 500	2500	1500	5 400	6
CAR/CAP 32xSx2	2 500	1500	900	5 400	13
CAR/CAP 32xSx4	1 500	900	500	5 400	26
E110C/E110CB	**25 µF**	**16 µF**	**12 µF**		
CAR/CAP 32xSx1	3 500	2 500	1 500	5 400	8
CAR/CAP 32xSx2	2 500	1 500	900	5 400	16
CAR/CAP 32xSx4	1 500	900	900	5 400	32
E220D/E220DB	**12 µF**	**8 µF**			
CAR 40xSx1	6 000	4 000		8 700	9
CAR 40xSx2	4 000	2 700		8 700	17
CAR 40xSx4	2 000	1 200		8 700	34
E110D/E110DB	**37 µF**	**25 µF**			
CAR 40xSx1	6 000	4 000		8 700	10
CAR 40xSx2	4 000	2 700		8 700	20
CAR 40xSx4	2 000	1 200		8 700	40

The CAR actuator range is self-locking within the dynamic load range with gear (1). Gear (2) and (4) are self-locking within the dynamic load range if a DC-motor with brake is used.

CAR actuators equipped with AC-motors are self-locking within the dynamic load range if a brake is used.

Performance diagram

CAR 22.../D12B

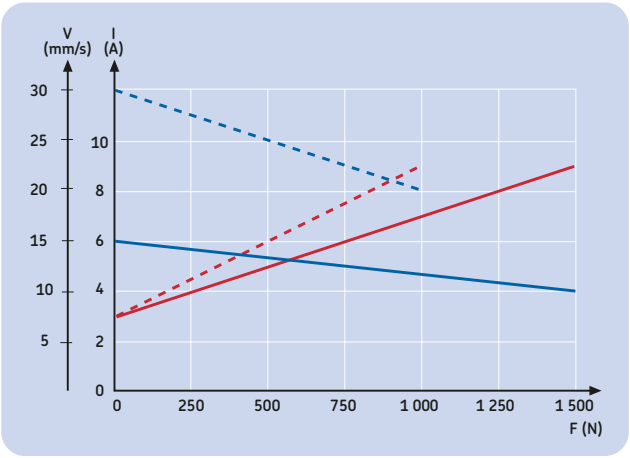

CAR 22.../D24B

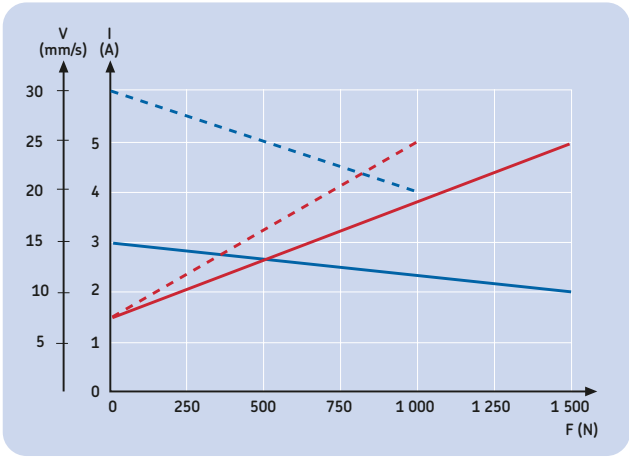

CAR/CAP 32.../D12C

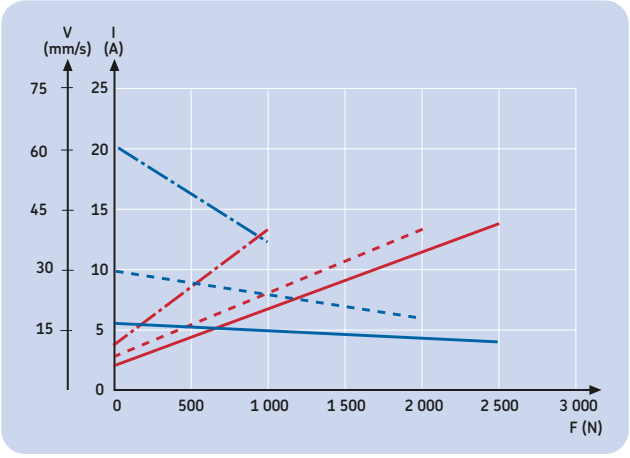

CAR/CAP 32.../D24C/D24CS/D24CB

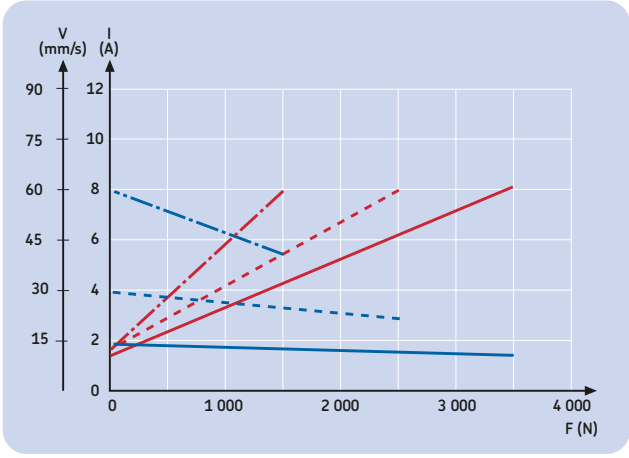

CAR/CAP 32.../D24CW

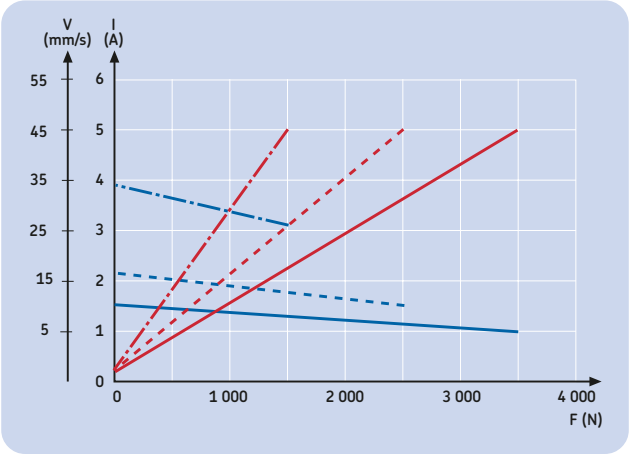

CAR 40.../D24D/D24DS/D24DB

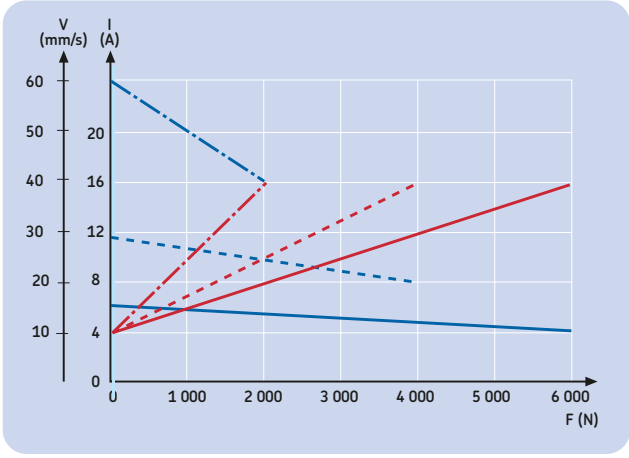

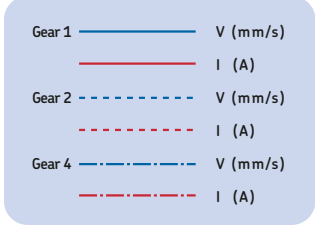

Motors

SKF actuators are fitted with either AC or DC-motors.

DC-motors
12 and 24 volt motors are available. CAR and CAP 32 are fitted with compact flat motors. DC-motors are simple to control but have a limited service life, due to the wear of the brushes and commutator. The "General motor data" table on page 11 shows the approximate service life when operated at rated power. The flat motors are protected against dust and moisture, to protection class IP44. The connecting cables on all flat motors are 300 mm in length.

AC-motors
120 and 230 volt motors are available. The 230 V motors are fitted with thermal protection. AC-motors are protected against dust and moisture, to protection class IP54 (with brake IP20). The motors for CAR 32 and 40 are fitted with connecting cables 1 000 mm in length. A start capacitor is required for the operation of AC-motors. For selection of capacitor see page 13 (calculation section).

Motors with extended shaft
These motors are suitable for situations where it is necessary to synchronize the actuators. The shaft can then be linked to the extended shaft or another motor or to the shaft of a CARN 32 actuator. The extended shaft can also be used to adjust the actuator manually with a hand wheel, for example, in case of power failure. Motors with extended shaft are available in the 24 VDC range for use on the CAR 32, 40 and CAP 32.

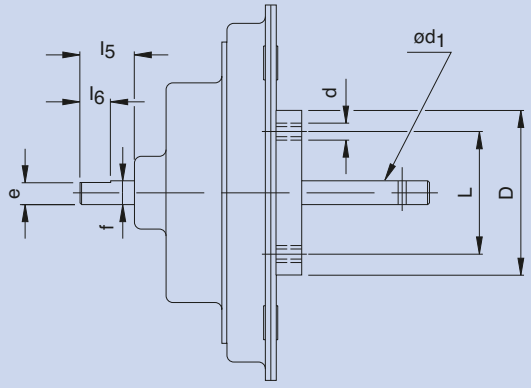

Motor with extended shaft (D24CS/D24DS)

Actuator size	Motor type	Dimensions D	d	d_1	e	f	l_5	l_6	L
		mm							
CAR 32	D24CS	48	M5	7hg	6,5	7h7	16	9	36
CAR 40	D24DS	70	M8	9h6	6,5	7h7	16	9	55

General motor data

Designation	Rated voltage	Rated speed	Brush life
DC-motors	**VDC**	**rpm**	**hours**
D12B	12	7 600	300
D12C	12	5 300	1 500
D24B	24	7 500	500
D24C	24	5 500	1 500
D24CB	24	5 500	1 500
D24CW	24	2 500	1 500
D24CS	24	5 500	1 500
D24D	24	4 700	900
D24DB	24	4 700	900
D24DS	24	4 700	900
AC-motors	**VAC**	**rpm**	
E220C	230/50 Hz	2 600	-
E220CB	230/50 Hz	2 600	-
E220D	230/50 Hz	2 790	-
E220DB	230/50 Hz	2 790	-
E110C	120/60 Hz	3 250	-
E110CB	120/60 Hz	3 250	-
E110D	120/60 Hz	3 350	-
E110DB	120/60 Hz	3 350	-

Recommended wiring diagram for general connection of CAR with 230/120 VAC-motors

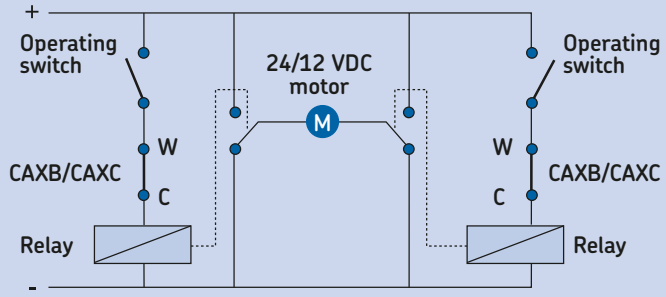

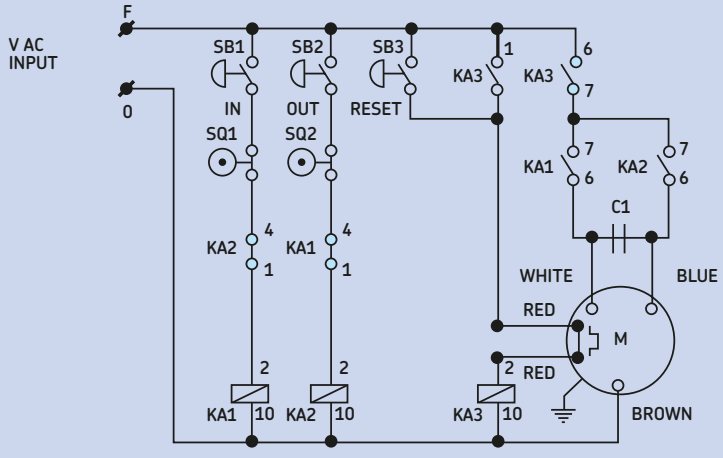

A low voltage limit switch (CAXB) can be used in connection with SKF special electronic control systems. As standard, motors are fitted with thermo-contacts which activates at +140 °C.

SB = operating switch
SQ = limit switch
KA = relay
C1 = capacitator
M = motor

Calculations

Life calculation

The service life of a CAR actuator is normally determined by the L_{10} life of the ball screw. In most cases there is less wear on the worm gear and bearings than on the ball screw.

Under certain circumstances the life of the motor is shorter than that of the ball screw, however, the motor can be easily replaced. The table, page 11, shows the life of various DC-motors at rated output power. Generally, the life of DC-motors is reduced when load and number of starts/stops is increased.

To calculate the basic rating life L_{10} of ball screw it is sufficient if the dynamic load and actual stroke is known. L_{10} is defined as the life that 90 % of a sufficiently large group of apparently identical ball screws can be expected to attain or exceed.

$$L_{10\,d\,s} = \frac{500\,000 \times p}{S} \times \frac{(C)^3}{F_M}$$

$L_{10\,d\,s}$ = basic rating life in double strokes i.e. a stroke from one end position to the other and back again.

p = lead of the ball screw mm (CAR 22-2,5 mm, CAR 32-4 mm, CAR 40-5 mm).

S = actual stroke (mm).

C = ball screw basic dynamic load rating (N) CAR 22-1 500 N, CAR 32-3 500 N, CAR 40-6 000 N).

F_M = cubic mean load (N).

In many cases, the magnitude of the load fluctuates. In order to calculate the equivalent screw load, it is first necessary to determine a constant mean load F_M which would have the same influence on the ball screw as the actual fluctuating load. A constant mean load can be obtained from the formula below.

$$F_M = \sqrt[3]{\frac{F_1^3 \times S_1 + F_2^3 \times S_2 + F_3^3 \times S_3 + \ldots}{S_1 + S_2 + S_3 + \ldots}}$$

$F_1, F_2, F_3 \ldots$ = cubic load (N) during S_1, S_2 and S_3

.... partial stroke.

The diagrams show life in double strokes, $L_{10\,d\,s}$ at various load and stroke.

Example:

CAR 32x500x1/D24C having a load of 2 800 N in one direction of movement and 2 100 N in the other. The entire stroke of the actuator is utilized.

$$F_M = \sqrt[3]{\frac{2\,800^3 \times 500 + 210^3 \times 500}{500 + 500}} = 2\,500 \text{ N}$$

Diagram for CAR 32 shows $L_{10\,d\,s}$ = 10 000 double strokes

Basic rating life $L_{10\,d.s.}$

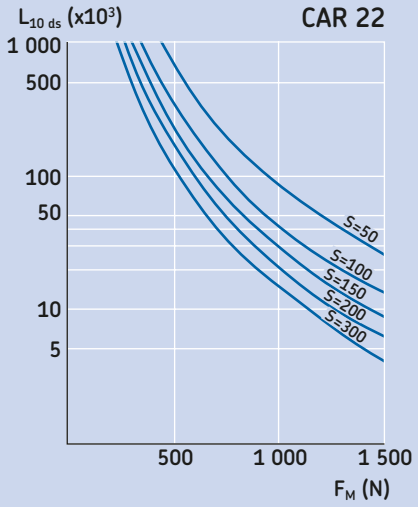

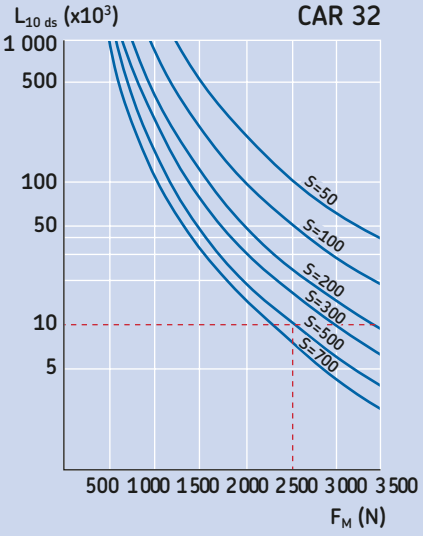

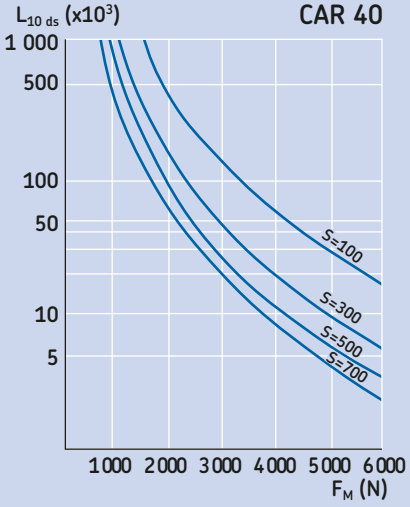

SKF

Duty factor

SKF linear actuators are designed for intermittent operation. Permitted load is related to the duty factor i.e. load must be reduced when the duty factor is increased. In the diagrams maximum load is shown as a function of duty cycle.

A capacitor must be selected for AC-actuators. The diagrams show required capacitor size at various load and duty factor. If the recommended duty factor is exceeded the actuator may be overheated and damaged. Duty factor is defined as amount of time running under load versus total cycle time.

$$\text{Duty factor \%} = \frac{N}{N+R} \times 100$$

N = running under load
R = rest period
N+R = total cycle time

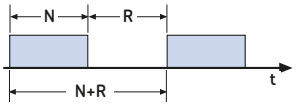

Permitted load for DC-actuators at a specific duty factor is expressed in percentage of maximum dynamic load capacity (see diagram).

Example:
A CAR 40x700x2/D24D is running with the following cycle. 5 seconds running, 5 seconds rest, 5 seconds running, 15 seconds rest, and so on.

Calculate duty factor and maximum load for this working cycle.

$$\text{Duty factor} = \frac{5 + 5}{(5 + 5) + (5 + 15)} \times 100 = 33\ \%$$

Diagram shows that permitted load (F_{act}/F_{rated}) is 73 % of maximum dynamic load at 33 % duty factor.

Max. dynamic load = 5 000 N
Permitted load = 0,73x5 000=3 650 N.

Note:
All diagrams are valid for a maximum ambient temperature of +20 °C. At higher temperatures or in critical applications, please contact SKF.

CAR 22, 32, 40 ... 24/12 VDC. CAP 32... 24/12 VDC

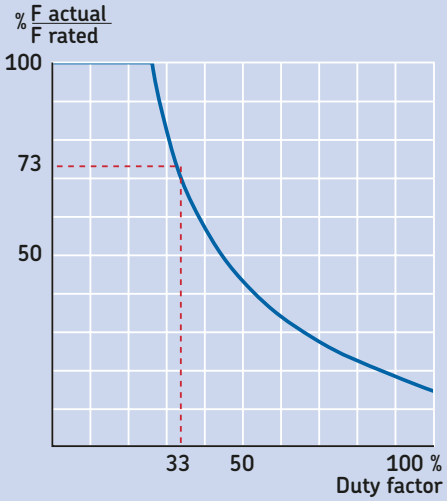

CAR 32...230/120 VAC

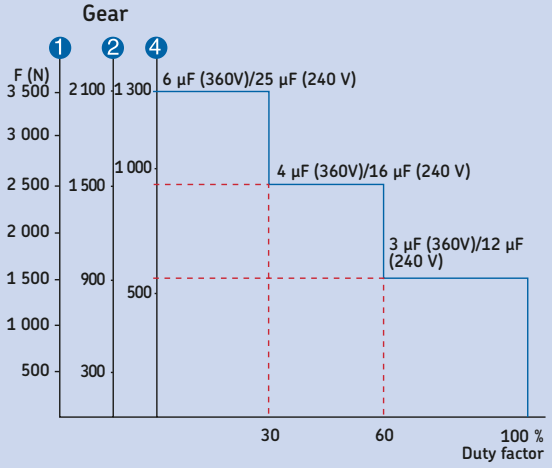

CAR 40... 230/120 VAC

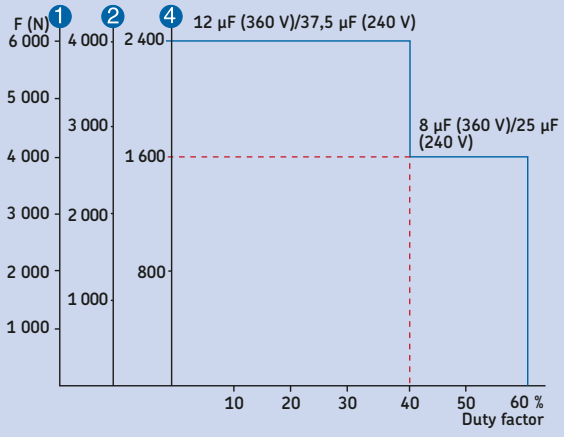

Buckling safety factor

At max. dynamic load the buckling safety factor exceeds 2 for all actuators with standard stroke, except CAR 32 with a stroke of 700 mm.

The diagrams below, show the buckling load for CAR 32 and 40 with 500 and 700 mm strokes. As shown, the buckling load varies with the actual stroke. If the required stroke exceeds the maximum standard stroke, please contact SKF.

Buckling load

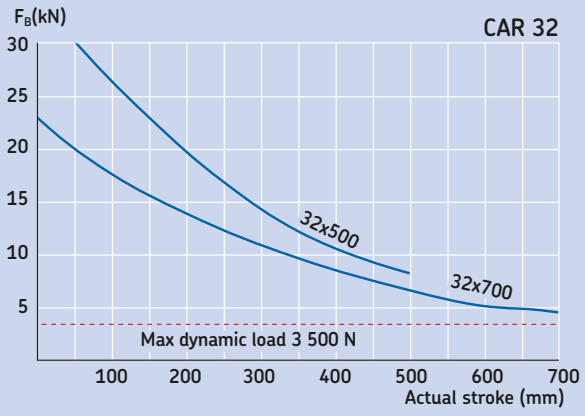

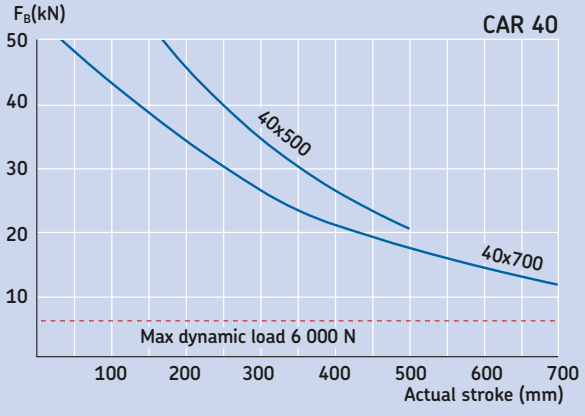

Wire dimension for DC-Motors

Long lead wires between the power source and the actuator will result in a voltage drop for DC-units.

The wires should be selected so that the voltage drop does not exceed 5 % of rated voltage. Required wire dimension can be calculated using the following formula:

$$a = 0{,}4 \times L \times \frac{I}{U}$$

a = cross section area of the wire (mm^2)
L = total wire length in the both directions (m)
I = current consumption (A)
U = supply voltage (VDC)

Example:
L = 5 m
I = 14 A
U = 12 VDC

$$a = 0{,}4 \times 5 \frac{14}{12} = 2{,}3\ mm^2$$

i.e. select nearest standard wire: a=2,5 mm^2

Temperatures

The CAR actuator can normally be used within a temperature range -20 °C to +70 °C. All performance data stated in the catalogue are only valid at +20 °C.

Notes

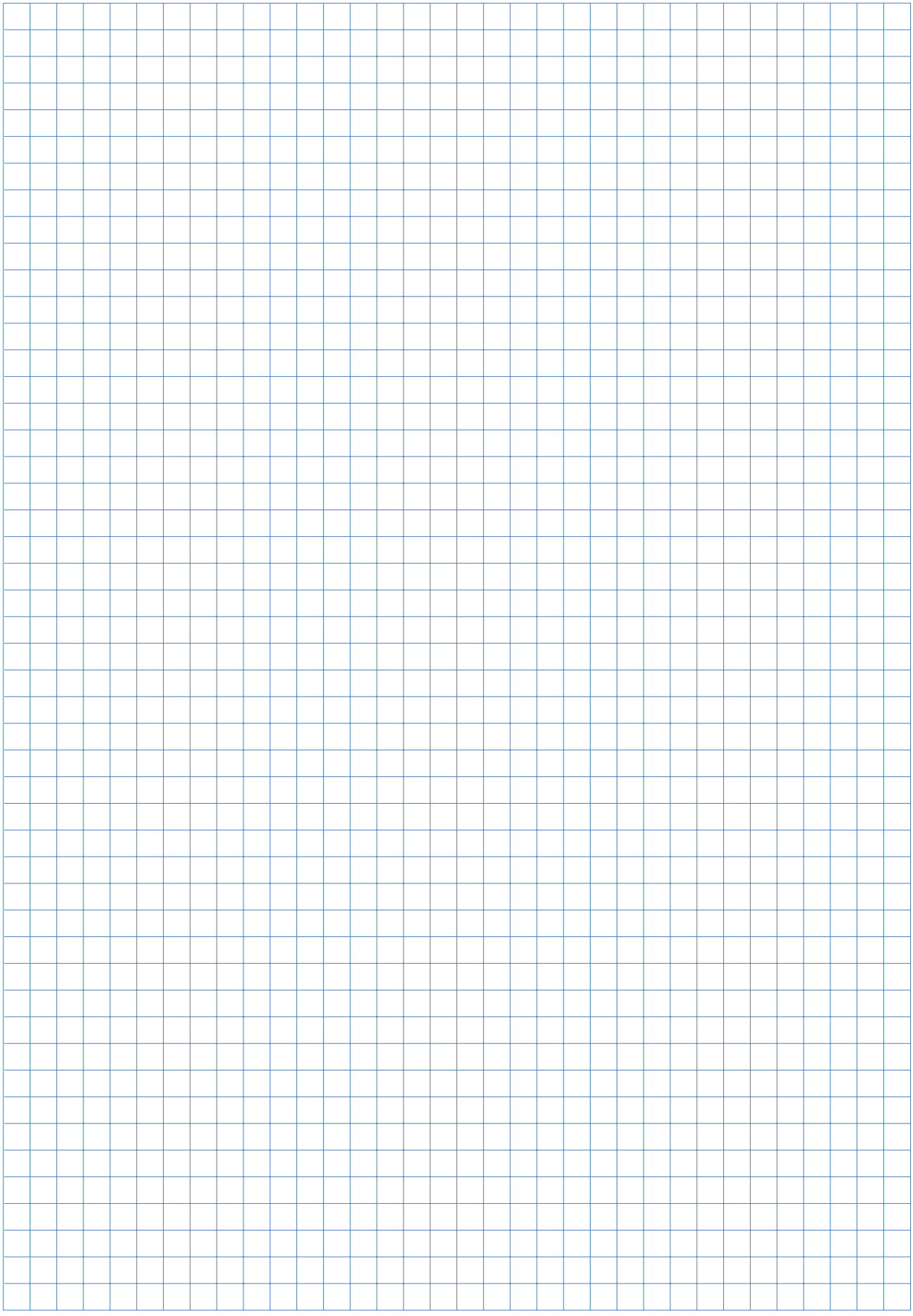

Accessories

Mounting attachments

SKF mounting attachments provide simple and secure mounting of the actuators. There are various types for attachment both to front and rear of the actuator. The mounting attachments are supplied complete with nuts and bolts.

Front mounting attachments

Rod-end, type 575

The rod-end allows some alignment of the actuator. The rod-end requires no maintenance and consists of a head with an inner pivot bearing and a bearing surface located between the hole in the head and the inner ring. The rod-end is made of galvanized steel. The unit is supplied complete with lock nut. Mounting attachment type 575 must not be combined with type 581.

Rod-end designation	Appropriate for linear actuator	Dimensions A	B	d	G	G_1	H	H_1	Degrees α
	size	mm							°
575-22	22	30	14	10	M10	15	43	5	13
575-32	32	34	16	12	M12	18	50	6	13
575-40	40	42	21	16	M16	24	64	8	15

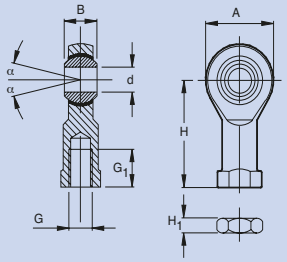

Clevis attachment, type 576

This consists of a galvanized clevis head and a journal fitted with a quick coupling. It allows simple and rapid attachment of the actuator. This mounting attachment is supplied complete with locking nut.

Clevis designation	Appropriate for linear actuator	Dimensions d	G	H	H_1	H_2	H_3	N	N_1
	size	mm							
576-22	22	10h11	M10	40	20	12	5	20	10
576-32	32	12h11	M12	48	24	14	6	24	12
576-40	40	16h11	M16	64	32	19	8	32	16

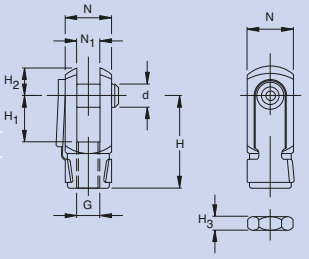

Rear mounting bracket, type 580

The bracket consists of an eye on a base plate, made of light alloy, with a bronze bush vulcanized into the ring of the eye. This gives some degree of flexibility to the attachment and the rubber also has a vibration damping effect. The unit is supplied complete with attachment bolts.

Bracket designation	Appropriate for linear actuator	Dimensions A	d	H	H_1	J	N
	size	mm					
580-22	22	46	10	22	6	32	5,5
580-32	32	55	12	28	12	40	6,6
580-40	40	80	16	36	15	59	9,0

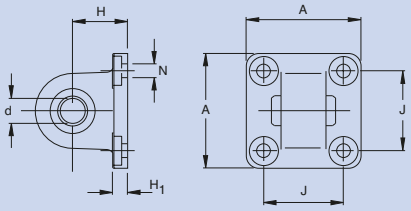

Ball-joint bracket, type 581

This bracket is intended for mounting at the rear of the actuator. It consists of an eye on a base plate, made of light alloy, with a pivoted bearing in the eye ring. This allows some degree of self-alignment. This bracket should not be used if the actuator is fitted with a friction clutch. The bracket is supplied complete with two spacer rings and attachments bolts. Mounting attachment type 581 must not be combined with type 575.

Bracket designation	Appropriate for linear actuator	Dimensions A	d	H	H_1	J	N	R	B	d	D
	size	mm									
581-22	22	46	10	22	6	32	5,5	15	8,0	10	13
581-40	40	80	16	36	11	59	9,0	25	11,5	16	20

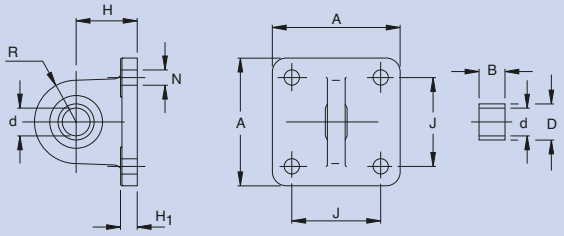

Universal bracket, type 582

This bracket is moulded in aluminum, and consists of a plate with an integrated ball, which has an attachment hole. The ball is guided, so it can be misaligned (±15°) horizontally and (±20°) vertically. This feature will allow some degree of misalignment, and make it possible to mount the actuator on an uneven surface.

Bracket designation	Appropriate for linear actuator	Dimensions A	d	H	H_1	J	N	B
	size	mm						
582-32	32	55	12	28	13	40	6,6	27,5

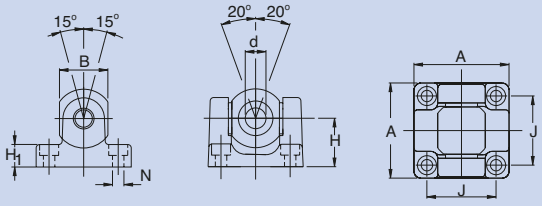

Limit switch CAXB

Limit switches, in combination with an SKF control unit make it possible to set the actuator for any desired stroke length. They also protect the actuator from running against the mechanical end stops, thereby avoiding damage.

The CAXB limit switch can be used on the following ball screw actuator: CAR, CAP, CARN and CCBR. It is robust and durable and can be used in most environments. CAXB limit switches are available in a number of standards lengths, but can be manufactured in special lengths on request.

The CAXB limit switch consists of a profiled tube, two switch units, a rod carrying a permanent magnet and a protective cover.

The profiled tube, which is made of anodized aluminium, is mounted directly on the protection tube of the actuator. The two switch units (proximity switches) are attached to the profiled tube and can be adjusted to any position. The magnet rod, made of stainless steel, is attached to the end of the adjustment tube and runs in a groove in the profiled tube.

When the magnet, which is attached to the free end of the rod, approaches the switch unit, the latter is activated. The switches are connected to the control unit, from which relays disconnect the power supply to the motor. The motor is then short-circuited, thereby braking the actuator.

The switches and connections are effectively protected by an anodized aluminium cover. There are three connections to the switch units, allowing them to be connected in "normally open", "normally closed" or "alternating" modes (see illustration below).

In order to minimize the stopping distance of the actuator and to ensure correct circuit-breaking, the actuator should be connected as shown in the wiring diagram below.

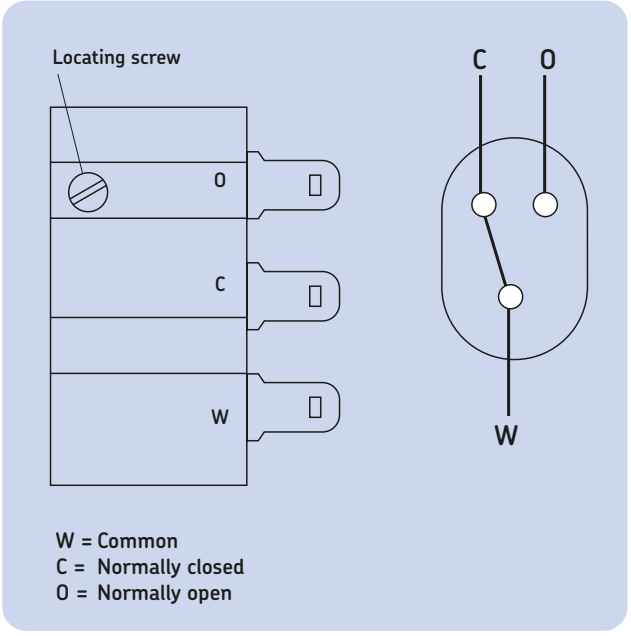

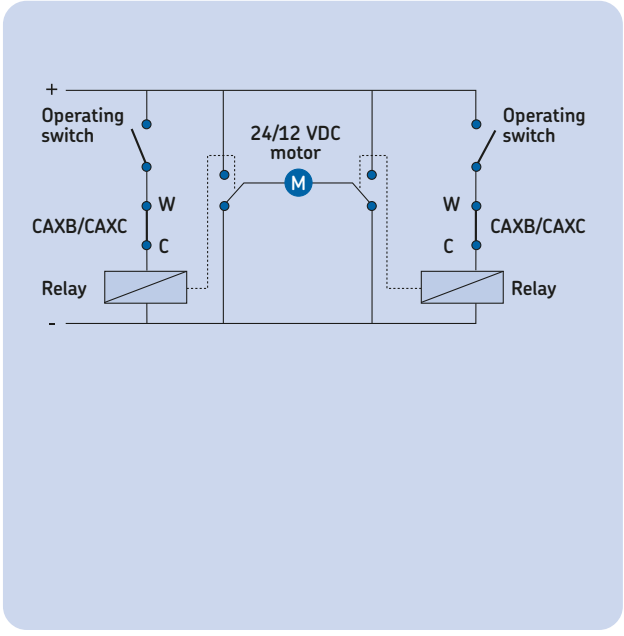

Permissible brake power 3 W
Max. brake voltage 200 VDC
Max. brake current 200 mA (DC)
The switches must not be connected to an AC supply.

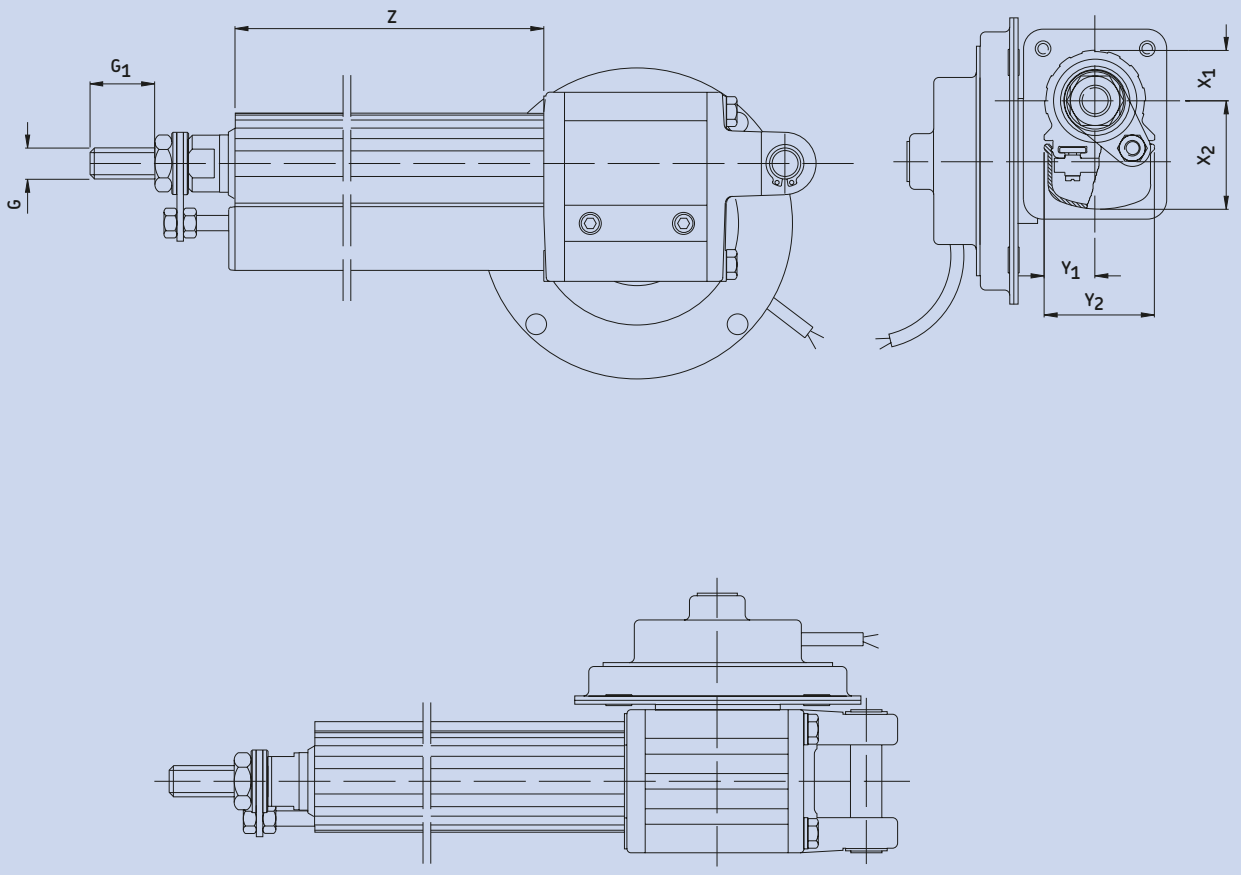

Designation	Dimensions						
	X_1	X_2	Y_1	Y_2	Z	G	G_1
	mm	mm	mm	mm	mm	mm	mm
CAXB 22×50	14	37	22	42,5	120	M10×1,5	25
CAXB 22×100					170		
CAXB 22×150					220		
CAXB 22×200					270		
CAXB 22×300					370		
CAXB 32×50	20	42	20	42,5	120	M12×1,75	25
CAXB 32×100					170		
CAXB 32×200					270		
CAXB 32×300					370		
CAXB 32×500					570		
CAXB 32×700					770		
CAXB 40×100	23	46	19	42,5	170	M16×2	35
CAXB 40×300					370		
CAXB 40×500					570		
CAXB 40×700					770		

Options

Friction clutch
All CAR actuators, except size 22, can be equipped with a friction clutch. The friction clutch is not intended for use as a load limiter, but only for protection of the actuator and the mechanism to which the actuator is fitted, in the event of dynamic overload.

Back-up nut
CAR 32 and CAR 40 can be fitted with a back-up nut in cases where added safety is required. The ball nut is then equipped with a device which prevents the ball nut moving axially, in case of failure.

SKF control units

	CAEL 10-24R	CAEN 10R	CAEP 10P-SL	CAED 5-24R	CAED 9-24R	CAEV 110/220
DC Motor						
D24B				●		
D24C	●	●	●		●	
D24CS	●	●	●		●	
D24CB	●					
D24CW				●		
AC Motor						
E110C						●
E110CB						●
E220C						●
E220CB						●
Limit switch						
CAXB	●	●		●	●	●
Hand switch						
CAES 31B	●	●	●			
CAES 31C				●	●	●

Type keys

CAR 22

Dynamic load (N)/Speed (mm/s)		Motor options	Code
1 500/xx	1 000/xx	No motor	**0000**
1 500/15-10	1 000/30-20	12 VDC, flat motor, IP44	**D12B**
1 500/15-10	1 000/30-20	24 VDC, flat motor, IP44	**D24B**
1	**2**		

C A R ☐ 22 X ☐☐☐ X ☐ ☐☐☐☐

Motor assembly

Right	R
Left	L

Stroke

50 mm	050
100 mm	100
150 mm	150
200 mm	200
300 mm	300
50 > S > 300 mm	xxx

CAR 32

Dynamic load (N)/Speed (mm/s)			Motor options	Code
3 500/XX	2 500/XX	1 500/XX	No motor	**0000**
2 500/15-10	2 000/30-20	1 000/60-40	12 VDC, flat motor, IP44	**D12C**
3 500/15-10	2 500/30-20	1 500/60-40	24 VDC, flat motor, IP44	**D24C**
3 500/9-5	2 500/18-10	1 500/34-24	24 VDC, flat motor, low speed, IP44	**D24CW**
3 500/15-10	2 500/30-20	1 500/60-40	24 VDC, flat motor, extended shaft, IP44	**D24CS**
3 500/15-10	2 500/30-20	1 500/60-40	24 VDC, flat motor, brake IP20	**D24CB**
3 500/8	2 500/16	1 500/32	120 VAC/60 Hz, single phase, IP54	**E110C**
3 500/8	2 500/16	1 500/32	120 VAC/60 Hz, single phase, brake IP20	**E110CB**
3 500/6	2 500/13	1 500/26	230 VAC/50 Hz, single phase, IP54	**E220C**
3 500/6	2 500/13	1 500/26	230 VAC/50 Hz, single phase, brake IP20	**E220CB**
1	**2**	**4**		

C A ☐ ☐ 32 X ☐☐☐ X ☐ ☐ ☐☐☐☐☐☐

Actuator versions

Without potentiometer	R
With potentiometer	P

Motor assembly

Right	R
Left	L

Stroke

50 mm	050
100 mm	100
200 mm	200
300 mm	300
500 mm	500
700 mm	700
50 > S > 700 mm	xxx

Options

Friction clutch (only for CAR versions)	F
Back-up nut	S

CAR 40

Dynamic load (N)/Speed (mm/s)			Motor options	Code
6 000/xx	4 000/xx	2 000/xx	No motor	**0000**
6 000/15-10	4 000/30-20	2 000/60-40	24 VDC, flat motor, IP44	**D24D**
6 000/15-10	4 000/30-20	2 000/60-40	24 VDC, flat motor, extended shaft, IP44	**D24DS**
6 000/15-10	4 000/30-20	2 000/60-40	24 VDC, flat motor, brake IP201	**D24DB**
6 000/10	4 000/20	2 000/40	120 VAC/60 Hz, single phase, IP54	**E110D**
6 000/10	4 000/20	2 000/40	120 VAC/60 Hz, single phase, brake, IP20	**E110DB**
6 000/9	4 000/17	2 000/34	230 VAC/50 Hz, single phase, IP54	**E220D**
6 000/9	4 000/17	2 000/34	230 VAC/50 Hz, single phase, brake, IP20	**E220DB**
1	**2**	**4**		

C A R ☐ 40 X ☐☐☐ X ☐ ☐ ☐☐☐☐☐☐

Motor assembly

Right	R
Left	L

Stroke

100 mm	100
300 mm	300
500 mm	500
700 mm	700
50 > S > 700 mm	xxx

Options

Friction clutch	F
Back-up nut	S

Notes

The CAT actuator range

The CAT modular design concept makes it easy to interchange critical components such as motors, gears, attachments, etc. Custom built actuators are easily and cost-efficiently built from standard parts. The CAT flexibility makes it suitable for a large number of applications.



Options:

- AC or DC-motors, 13 different alternatives
- Ball or sliding screw
- 3 different screw pitches
- 3 different gear ratios
- 7 standard stroke lengths up to 700 mm
- Special stroke lengths up to 1 500 mm (only pull force)
- Friction clutch gears
- IP44, IP54 or IP65
- EMC filter (EN 50 081-1 and EN 55 022)
- Range of front and rear attachments
- Limit switches
- Feedback encoder in 2 versions



Typical applications

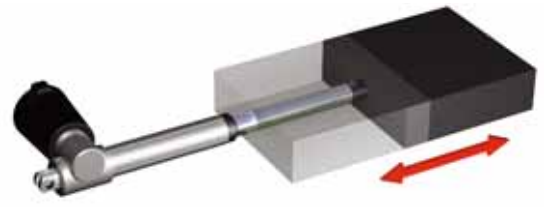

Pushing/pulling

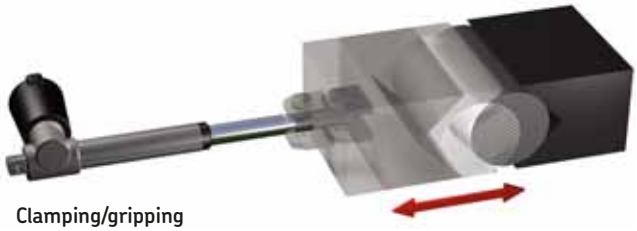

Clamping/gripping

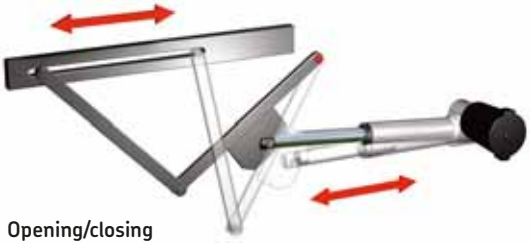

Opening/closing



Raising/lowering



Tilting

Build your own actuator

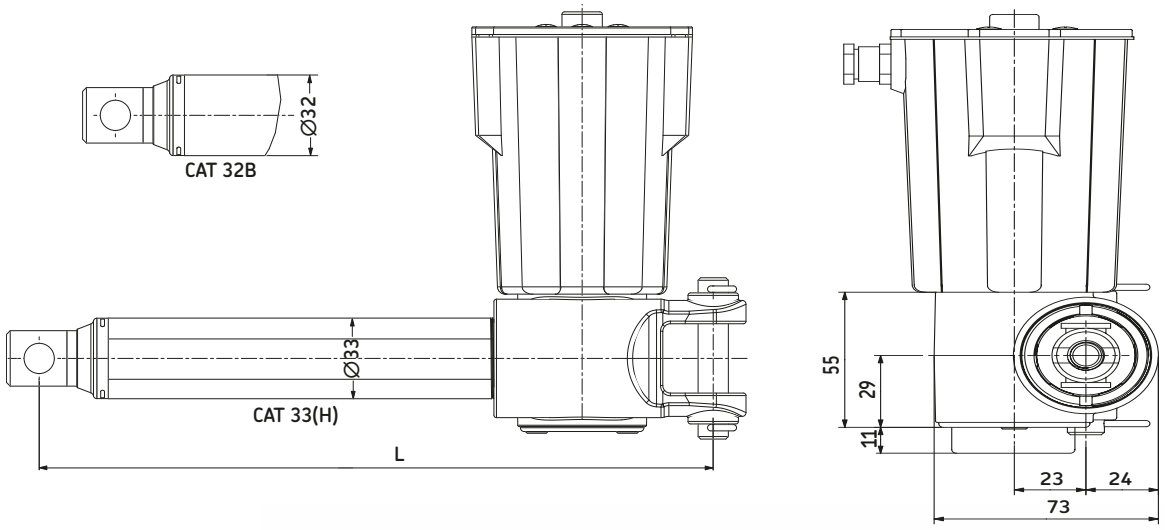

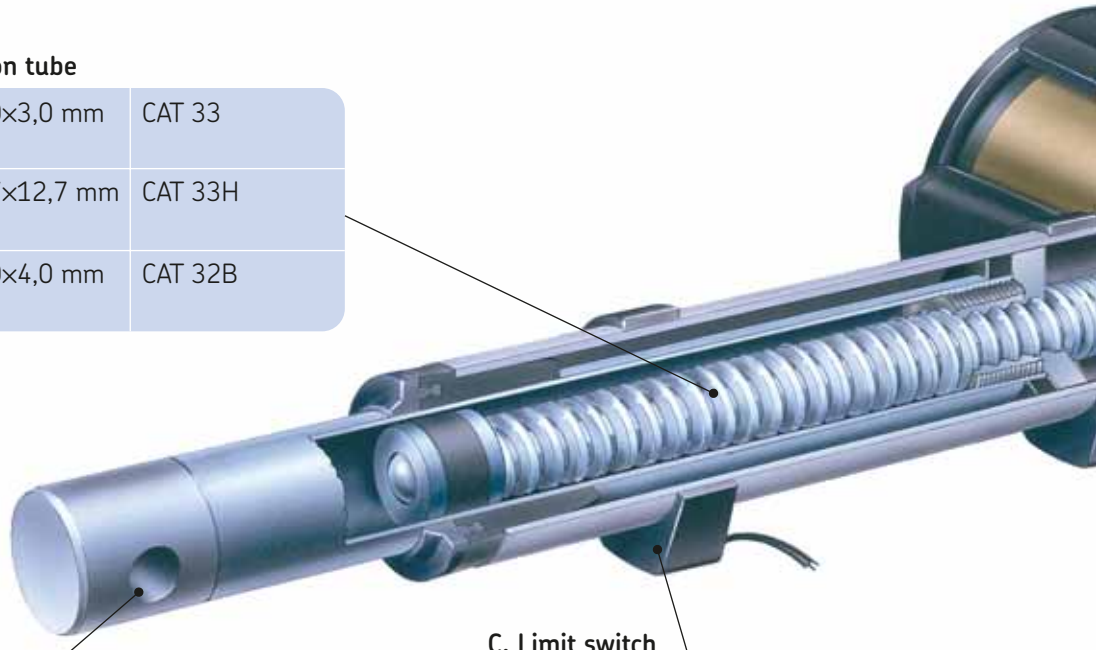

A. Screw and protection tube

Sliding screw/ Aluminium tube	12,0×3,0 mm	CAT 33
Sliding screw/ Aluminium tube	12,7×12,7 mm	CAT 33H
Ball screw/ Steel tube	12,0×4,0 mm	CAT 32B

B. Front attachments and retracted length

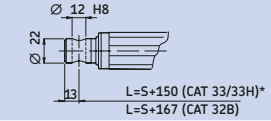	G1
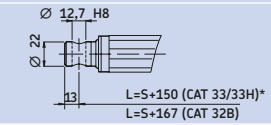	G2
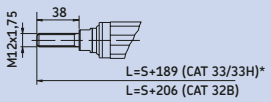	G3
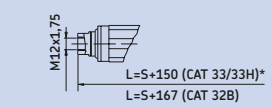	G4
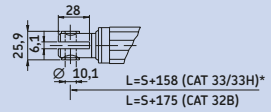	G5

*) If S ≥ 400 add 50 mm to retracted length.

C. Limit switch

CAT 33/33H	CAXC 33
CAT 32B	CAXB 32B

D. Cables

No cable	U
	CxxCT2
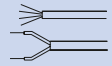	CxxCMET
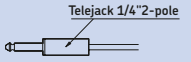	CxxCT2P
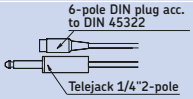	CxxCMET2P

F. Rear attachments

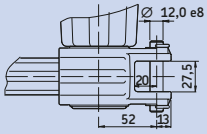	A1
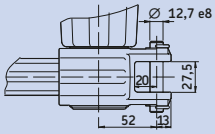	A2
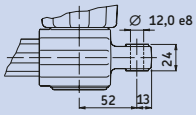	K1
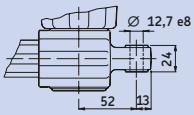	K2

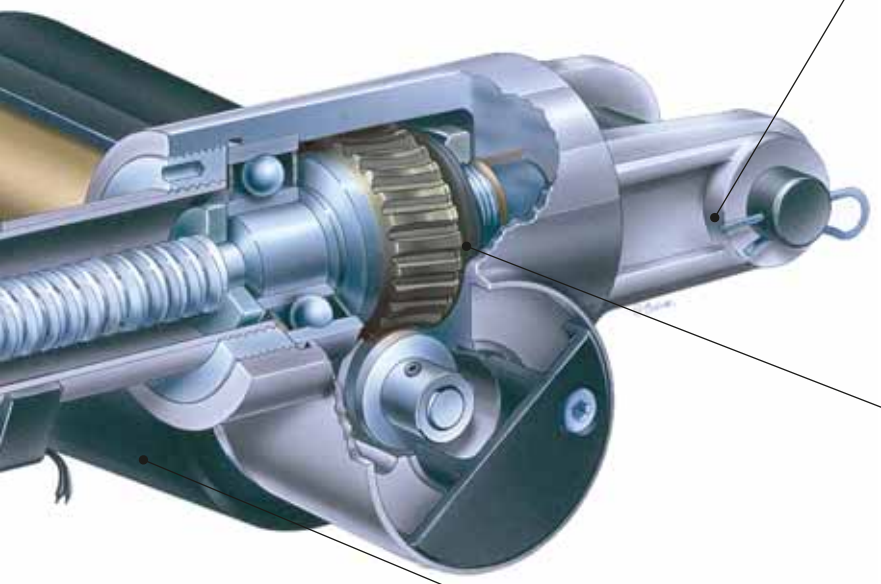

G. Gears

No. 1	Ratio 1:25	1
No. 2	Ratio 1:12,5	2
No. 4	Ratio 1:6,25	4

E. Motors

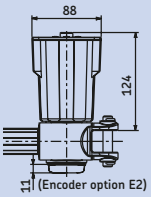	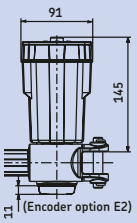	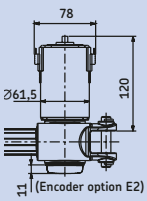	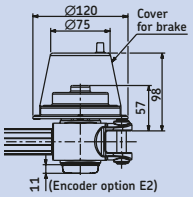	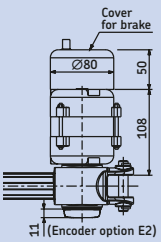	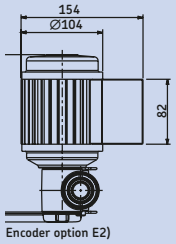
C12C C24C C24CW	C12CM C12CME C24CM C24CME C24CWM C24CWME	C12CN C24CN C24CWN	D12C D24C D24CB D24CS D24CW	E110C E110CB E220C E220CB	E380C

Combination chart

Select mechanical features

1

		Suffix	CAT33	CAT33H	CAT32B
Motor assembly	Left	L	●	●	●
	Right	R	●	●	●
Protection tubes	Aluminium		●	●	
	Steel				●
Screws	Sliding		●	●	
	Ball				●
Stroke lengths	50 mm	50			●
	100 mm	100	●	●	●
	200 mm	200	●	●	●
	300 mm	300	●	●	●
	400 mm	400	●	●	●
	500 mm	500			●
	700 mm	700			●
	Special[4]		●[8]	●[8]	●[9]
Gears	Gear ratio 1:25	1	●	●	●
	Gear ratio 1:12,5	2	●	●	●
	Gear ratio 1:6,25	4	●	●	●
Rear attachments	Fork ear ∅=12,0 mm	A1	●	●	●
	Fork ear ∅=12,7mm	A2	●	●	●
	Single ear ∅=12,0 mm	K1	●	●	●
	Single ear ∅=12,7 mm	K2	●	●	●
Front attachments	Hole ∅=12,0 mm	G1	●	●	●
	Hole ∅=12,7 mm	G2	●	●	●
	Male thread M12x1,75	G3	●	●	●
	Female thread M12x1,75	G4	●	●	●
	Fork ear ∅=10,1 mm	G5	●	●	●
Options	Friction clutch	F	●	●	●
	No friction clutch[6]	Z	●	●	●
	Ball nut with back up device	S			●
Limit switches	CAXB 32B[1]	CAXB			●
	CAXC 33[5]	CAXC	●	●	

Select motor

2

Motors	Without motor	0000	●	●	●
	12 VDC	C12C	●	●	●
	24 VDC	C24C	●	●	●
	24 VDC low speed	C24CW	●	●	●
	12 VDC flat motor	D12C	●	●	●
	24 VDC flat motor	D24C	●	●	●
	24 VDC flat motor, brake	D24CB	●	●	●
	24 VDC flat motor, extended shaft	D24CS	●	●	●
	24 VDC flat motor, low speed	D24CW	●	●	●
	120 VAC	E120C	●	●	●
	120 VAC with brake	E120CB	●	●	●
	230 VAC	E230C	●	●	●
	230 VAC with brake	E230CB	●	●	●
	400 VAC	E380C	●		●

[1] Front attachment G3 has to be used
[2] Option M has to be used
[3] Need cable with plug for T2P
[4] On request, please contact SKF for further information
[5] CAT 33H is not available with CAXC 33 when using gear no. 2 and 4
[6] Standard when using encoder (E)
[7] Always state type of cable when using IP65
[8] Customized stroke length available for S=50-400 mm
[9] S=50-700 mm, for longer stroke lengths, please contact SKF

Working range

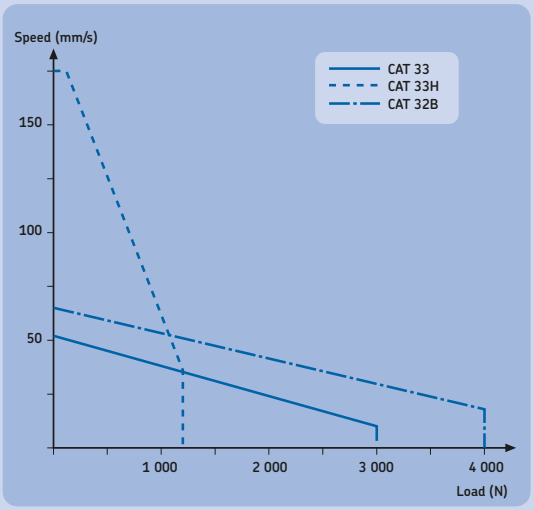

General performance curve for each actuator to give you a hint of where to start.

For easy selection three basic actuators forms the base for the CAT actuator range

- CAT 33 Sliding screw, standard
- CAT 33H Sliding screw, high speed
- CAT 32B SKF ball screw, for higher load and/or duty factors.

Protection class:
Available protection classes are indicated in type key.

Temperatures
Actuators can normally be used within a temperature range -20 °C to +50 °C. All performance data stated in this catalogue are only valid at +20 °C.

3 Select motor options

Options for motors

CxxC							All types
No cable	EMC filter[6)]	Encoder[2)]	No cover	IP65[7)]	Cable 2 m	Cable 2 m, plug	Encoder
U	M	E	N	I	T2	T2P	E2
●	●	●	●	●	●	●	●
●	●	●	●	●	●	●	●
●	●	●	●	●	●	●	●
							●
							●
							●
							●
							●
							●
							●
							●
							●
							●

4 Select control unit

Control units

CAEL 10-24R	CAED 9-24R	CAED 5-24R	CAEN 10R	CAEP 10P-SL	CAEV 110/220
●	●		●	●[3)]	
●		●	●	●[3)]	
●	●		●		
●					
●	●		●		
●	●	●	●		
					●
					●
					●
					●

5 Select hand controls

Hand controls

	CAEL 10-24R	CAED 9-24R	CAED 5-24R	CAEN 10R	CAEP 10P-SL	CAEV 110/220
CAES 31B	●			●	●	
CAES 31C		●	●			●

Performance

CAT 33 with DC-motors	Dyn. load (N)	Speed (mm/s)	Current cons. (A)
CAT(R/L) 33...x1/C12C	3 000	13-10	18
CAT(R/L) 33...x1/C24C, D24C	3 000	13-10	9
CAT(R/L) 33...x1/C24CW, D24CW	3 000	7-5	5
CAT(R/L) 33...x1/D12C	2 400	11-7	16
CAT(R/L) 33...x2/C12C	2 000	24-20	18
CAT(R/L) 33...x2/C24C, D24C	2 000	26-20	9
CAT(R/L) 33...x2/C24CW, D24CW	2 000	13-8	5
CAT(R/L) 33...x2/D12C	1 600	21-15	16
CAT(R/L) 33...x4/C12C	1 000	48-38	18
CAT(R/L) 33...x4/C24C, D24C	1 000	48-35	9
CAT(R/L) 33...x4/C24CW, D24CW	1 000	26-19	5
CAT(R/L) 33...x4/D12C	800	39-21	16
CAT 33 with AC-motors			
CAT(R/L) 33...x1/E220C 50 Hz (6 µF), E380C 50 Hz	3 000	5	
CAT(R/L) 33...x2/E220C 50 Hz (6 µF), E380C 50 Hz	2 000	10	
CAT(R/L) 33...x4/E220C 50 Hz (6 µF), E380C 50 Hz	1 000	20	
CAT(R/L) 33...x1/E110C 60 Hz (25 µF)	2 400	6	
CAT(R/L) 33...x2/E110C 60 Hz (25 µF)	1 600	12	
CAT(R/L) 33...x4/E110C 60 Hz (25 µF)	800	24	

Max. static load for actuator CAT 33: 4 000 N.

CAT 33H with DC-motors	Dyn. load (N)	Speed (mm/s)	Current cons. (A)
CAT(R/L) 33H...x1/C24C, D24C	1 200	56-36	9
CAT(R/L) 33H...x1/C24CW, D24CW	1 200	27-17	5
CAT(R/L) 33H...x1/C12C, D12C	1 000	50-38	18
CAT(R/L) 33H...x2/C24C, D24C	900	113-79	9
CAT(R/L) 33H...x2/C24CW, D24CW	800	60-35	5
CAT(R/L) 33H...x2/C12C, D12C	600	100-80	18
CAT(R/L) 33H...x4/C24C, D24C	500	174-140	9
CAT(R/L) 33H...x4/C24CW, D24CW	500	100-69	5
CAT(R/L) 33H...x4/C12C, D12C	400	174-150	18
CAT 33H with AC-motors			
CAT(R/L) 33H...x1/E220C (6 µF)	1 200	25-20	
CAT(R/L) 33H...x2/E220C (6 µF)	900	50-37	
CAT(R/L) 33H...x4/E220C (6 µF)	600	100-90	

Max. static load for actuator CAT 33H: 3 000 N.

CAT 32B with DC-motors	Dyn. load (N)	Speed (mm/s)	Current cons. (A)
CAT(R/L) 32B...x1/C12C	4 000	17-12	18
CAT(R/L) 32B...x1/C24CW, D24CW	4 000	9-5	5
CAT(R/L) 32B...x1/C24C, D24C	4 000	17-13	9
CAT(R/L) 32B...x1/D12C	3 000	17-11	16
CAT(R/L) 32B...x2/C12C	2 500	32-25	18
CAT(R/L) 32B...x2/C24C, D24C	2 500	33-24	9
CAT(R/L) 32B...x2/C24CW, D24CW	2 500	18-10	5
CAT(R/L) 32B...x2/D12C	2 000	34-19	16
CAT(R/L) 32B...x4/C12C	1 500	63-48	18
CAT(R/L) 32B...x4/C24C, D24C	1 500	65-50	9
CAT(R/L) 32B...x4/C24CW, D24CW	1 500	34-24	5
CAT(R/L) 32B...x4/D12C	1 000	67-43	16
CAT 32B with AC-motors			
CAT(R/L) 32B...x1/E220C 50 Hz (6 µF), E380C 50 Hz	3 500	7	
CAT(R/L) 32B...x2/E220C 50 Hz (6 µF), E380C 50 Hz	2 100	13	
CAT(R/L) 32B...x4/E220C 50 Hz (6 µF), E380C 50 Hz	1 300	26	
CAT(R/L) 32B...x1/E110C 60 Hz (25 µF)	3 500	8	
CAT(R/L) 32B...x2/E110C 60 Hz (25 µF)	2 100	16	
CAT(R/L) 32B...x4/E110C 60 Hz (25 µF)	1 300	32	

Max. static load for actuator CAT 32B: 5 400 N.

Limit switches

- Proximity switches - connect to control card according to the wiring diagram
- Max. current allowed through the switch is 200 mA (DC)
- CAXC 33 - designed for CAT 33/33H (aluminium protection tube)
- CAXB 32B - designed for CAT 32B (steel protection tube)

CAXC 33

- Two CAXC needed for inner and outer limit
- The switches reduce the effective stroke length by 20 mm

CAXB 32B

- For avoiding running into mechanical end stop, the limit switches should be located approximately 10 mm from respective end stop
- Front attachment G3 must be selected for this option

Limit switches / wiring diagram

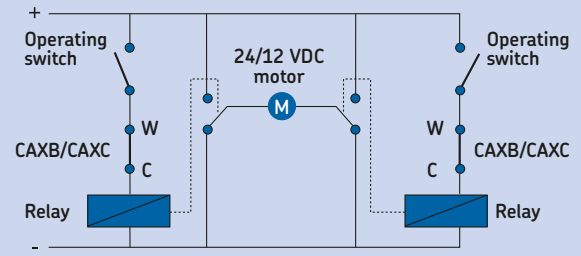

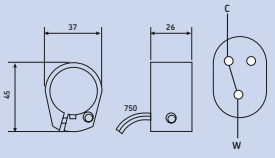

Permissible break power: 3 W
Max. break voltage: 200 VDC
Max. break current: 200 mA DC
W= Common
C = Normally closed

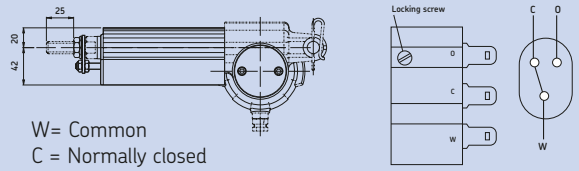

W= Common
C = Normally closed
O = Normally opened

Feedback

Encoder E

- Only for CxxC motors
- Hall effect, two channels with 90° displacement
- Located on motor shaft
- 2 pulses/channel and motor revolution
- EMC filter (EN 50 081-1 / EN 55 022)
- Supply voltage: 5-24 VDC
- Current output: max. 12,5 mA
- Final resolution according to gear ratio and actuator basic type (see table)

Encoder E2

- Can be fitted to all standard motors.
- Hall effect, two channels with 90° displacement
- Located on gear housing, see drawing
- 2 pulses/channel and motor revolution
- Supply voltage: 5-15 VDC
- Current output: max. 12,5 mA
- Final resolution according to gear ratio and actuator basic type (see table)

Feedback

	Gear	Pulses/mm	Resolution/pulse
CAT 33	1	16,67	0,06
	2	8,33	0,12
	4	4,17	0,24
CAT 33H	1	4,00	0,25
	2	2,00	0,50
	4	1,00	1,00
CAT 32B	1	12,50	0,08
	2	6.25	0,16
	4	3,13	0,32

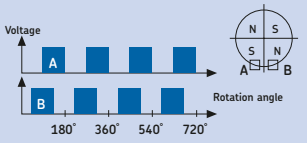

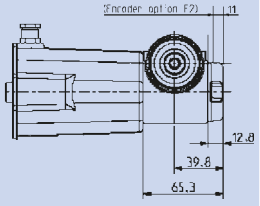

Duty factor

- Design for intermittent operation
- Permitted load related to duty factor, e.g. the higher the load, the less the permitted duty factor
- Duty factor is defined as running time under load versus total cycle time
- The diagram shows load as function of duty cycle
- For AC-motors the capacitor must be selected with respect to the duty cycle and load. Required capacitor size is indicated in diagram

Duty factor

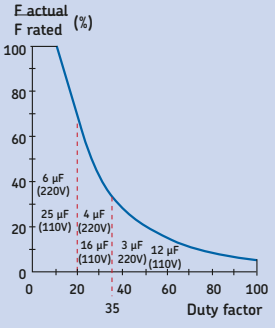

$$\text{Duty factor \%} = \frac{N}{N+R} \times 100$$

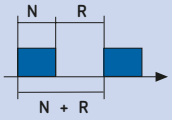

N = running time
R = rest period
N + R = total cycle time

Type key

CAT 33H

Dynamic load (N)/Speed (mm/s)			Motor options	Code
1 200/xx	900/xx	600/xx	No motor	**0000**
1 000/50-38	600/100-80	400/174-150	12 VDC, IP44 (65)	**C12C**
1 000/50-38	600/100-80	400/174-150	12 VDC, flat motor, IP44	**D12C**
1 200/56-36	900/113-79	500/174-140	24 VDC, IP44 (65)	**C24C**
1 200/27-17	800/60-35	500/100-69	24 VDC, low speed, IP44 (65)	**C24CW**
1 200/56-36	900/113-79	500/174-140	24 VDC, flat motor, IP44	**D24C**
1 200/56-36	900/113-79	500/174-140	24 VDC, flat motor, brake, IP20	**D24CB**
1 200/56-36	900/113-79	500/174-140	24 VDC, flat motor, ext. shaft, IP44	**D24CS**
1 200/27-17	800/60-35	500/100-69	24 VDC, flat motor, low speed, IP44	**D24CW**
1 200/20	900/37	600/90	120 VAC/60 Hz, brake, IP54	**E110C(25 µF)**
1 200/20	900/37	600/90	120 VAC/60 Hz, brake, IP20	**E110CB(25 µF)**
1 200/20	900/37	600/90	230 VAC/50 Hz, IP54	**E220C**
1 200/20	900/37	600/90	230 VAC/50 Hz, brake, IP20	**E220CB**
1 200/20	900/37	600/90	400 VAC/50 Hz, IP55	**E380C**
1	**2**	**4**		

C A T ☐ 33H X ☐☐☐ X ☐ ☐☐ ☐☐ ☐☐ ☐ / ☐☐☐☐☐☐ ☐☐☐

Motor assembly

Right	R
Left	L

Stroke (S):

100 mm	100
200 mm	200
300 mm	300
400 mm	400
100 < S < 400 mm (S > 400 mm contact SKF)	_ _ _

Rear attachment:

Fork ear, Ø=12,0 mm	A1
Fork ear, Ø=12,7 mm	A2
Single ear, Ø=12,0 mm	K1
Single ear, Ø=12,7 mm	K2

Front attachment:

Hole, Ø=12,0 mm	G1
Hole, Ø=12,7 mm	G2
Male thread, M12	G3
Female thread, M12	G4
Fork ear, Ø=10,1 mm	G5

Feed back:

No encoder (no code)	
Encoder (only for CxxC motors)	E
Encoder (for all standard motors)	E2

Options:

Friction clutch	F
No friction clutch	Z

Options for CxxC motors:

No cable	U
EMC filter	M
Motor without cover	N
IP65	I
Straight cable, 2,0 m, no plug	T2
Straight cable, 2,0 m, jack plug	T2P

Type key

CAT 33

Dynamic load (N)/Speed (mm/s)			Motor options	Code
3 000/xx	2 000/xx	1 000/xx	No motor	**0000**
3 000/13-10	2 000/24-20	1 000/48-38	12 VDC, IP44 (65)	**C12C**
2 400/11-7 1	600/21-15	800/39-21	12 VDC, flat motor, IP44	**D12C**
3 000/13-10	2 000/26-20	1 000/48-35	24 VDC, IP44 (65)	**C24C**
3 000/7-5	2 000/13-8	1 000/26-19	24 VDC, low speed, IP44 (65)	**C24CW**
3 000/13-10	2 000/26-20	1 000/48-35	24 VDC, flat motor, IP44	**D24C**
3 000/13-10	2 000/26-20	1 000/48-35	24 VDC, flat motor, IP44, ext. shaft	**D24CS**
3 000/7-5	2 000/13-8	1 000/26-19	24 VDC, flat motor, low speed, IP44	**D24CW**
2 400/6	1 600/12	800/24	120 VAC/60 Hz, IP54	**E110C**
2 400/6	1 600/12	800/24	120 VAC/60 Hz, brake, IP20	**E110CB**
3 000/5	2 000/10	1 000/20	230 VAC/50 Hz, IP54	**E220C**
3 000/5	2 000/10	1 000/20	230 VAC/50 Hz, brake, IP20	**E220CB**
3 000/5	2 000/10	1 000/20	400 VAC/50 Hz, IP55	**E380C**
1	**2**	**4**		

C A T ☐ 33 X ☐ ☐ ☐ X ☐ ☐ ☐ ☐ ☐ ☐ ☐ / ☐ ☐ ☐ ☐ ☐ ☐ ☐ ☐ ☐

Motor assembly

Right	R
Left	L

Stroke (S):

100 mm	100
200 mm	200
300 mm	300
400 mm	400
100 < S < 400 mm (S > 400 mm contact SKF)	_ _ _

Rear attachment:

Fork ear, ∅=12,0 mm	A1
Fork ear, ∅=12,7 mm	A2
Single ear, ∅=12,0 mm	K1
Single ear, ∅=12,7 mm	K2

Front attachment:

Hole, ∅=12,0 mm	G1
Hole, ∅=12,7 mm	G2
Male thread, M12	G3
Female thread, M12	G4
Fork ear, ∅=10,1 mm	G5

Feed back:

No encoder (no code)	
Encoder (only for CxxC motors)	E
Encoder (for all standard motors)	E2

Options:

Friction clutch	F
No friction clutch	Z

Options for CxxC motors:

No cable	U
EMC filter	M
Motor without cover	N
IP65	I
Straight cable, 2,0 m, no plug	T2
Straight cable, 2,0 m, jack plug	T2P

Type key

CAT 32B

Dynamic load (N)/Speed (mm/s)			Motor options	Code
1 200/xx	900/xx	600/xx	No motor	**0000**
4 000/xx	2 500/xx	1 500/xx	No motor	**0000**
4 000/17-12	2 500/32-25	1 500/63-48	12 VDC, IP44 (65)	**C12C**
3 000/17-11	2 000/34-19	1 000/67-43	12 VDC, flat motor, IP44	**D12C**
4 000/17-13	2 500/33-24	1 500/65-50	24 VDC, IP44 (65)	**C24C**
4 000/9-5	2 500/18-10	1 500/34-24	24 VDC, low speed, IP44 (65)	**C24CW**
4 000/17-13	2 500/33-24	1 500/65-50	24 VDC, flat motor, IP44	**D24C**
4 000/17-13	2 500/33-24	1 500/65-50	24 VDC, flat motor, IP44, ext. shaft	**D24CS**
4 000/9-5	2 500/18-10	1 500/34-24	24 VDC, flat motor, low speed, IP44	**D24CW**
3 500/8	2 100/16	1 300/32	120 VAC/60 Hz, IP54	**E110C**
3 500/8	2 100/16	1 300/32	120 VAC/60 Hz, brake, IP20	**E110CB**
3 500/6	2 100/13	1 300/26	230 VAC/50 Hz, IP54	**E220C**
3 500/6	2 100/13	1 300/26	230 VAC/50 Hz, brake, IP20	**E220CB**
3 500/6	2 100/13	1 300/26	400 VAC/50 Hz, IP55	**E380C**
1	**2**	**4**		

C A T ☐ 32B X ☐☐☐ X ☐ ☐☐ ☐☐ ☐☐ ☐ / ☐☐☐☐☐☐ ☐☐☐

Motor assembly

Right	R
Left	L

Stroke (S):

50 mm	050
100 mm	100
200 mm	200
300 mm	300
400 mm	400
500 mm	500
700 mm	700
50 < S < 700 mm (S > 700 mm contact SKF)	_ _ _

Rear attachment:

Fork ear, ∅=12,0 mm	A1
Fork ear, ∅=12,7 mm	A2
Single ear, ∅=12,0 mm	K1
Single ear, ∅=12,7 mm	K2

Front attachment:

Hole, ∅=12,0 mm	G1
Hole, ∅=12,7 mm	G2
Male thread, M12	G3
Female thread, M12	G4
Fork ear, ∅=10,1 mm	G5

Feed back:

No encoder (no code)	
Encoder (only for CxxC motors)	E
Encoder (for all standard motors)	E2

Options:

Friction clutch	F
No friction clutch	Z
Back-up ball nut	S

Options for CxxC motors:

No cable	U
EMC filter	M
Motor without cover	N
IP65 (mandatory to state type of cable)	I
Straight cable, 2,0 m, no plug	T2
Straight cable, 2,0 m, jack plug	T2P

CAT actuator with potentiometer

Positioning accuracy and service life is achieved by detecting the position directly on the moving nut and by keeping the moving parts to a minimum.



Technical data:	CAP 43A	CAP 43B
Stroke length:	100-400 mm	50-700 mm
Supply voltage:	24 VDC	24 VDC
Duty factor:	10 % at 3 000 N	15 % at 4 000 N
Potentiometer cable:	Straight 2 m	Straight 2 m
Potentiometer:	10 kΩ (+/-20 %)	10 kΩ (+/-20 %)
Linearity:	+/-5 %	+/-5 %
Protection class:	IP44 or IP65	IP44 or IP65
Manufactured acc. to:	EN55014, EN55 011	EN55014, EN55011

Performance data: Actuator	Dyn. load	Speed	Current cons.
	N	mm/s	A
CAP(R/L) 43A...x1/C24C, D24C	3 000	13-10	9
CAP(R/L) 43A...x1/C24CW, D24CW	3 000	7-5	5
CAP(R/L) 43A...x2/C24C, D24C	2 000	26-20	9
CAP(R/L) 43A...x2/C24CW, D24CW	2 000	13-8	5
CAP(R/L) 43A...x4/C24C, D24C	1 000	48-35	9
CAP(R/L) 43A...x4/C24CW, D24CW	1 000	26-19	5
CAP(R/L) 43B...x1/C24C, D24C	4 000	17-13	9
CAP(R/L) 43B...x1/C24CW, D24CW	4 000	9-5	5
CAP(R/L) 43B...x2/C24CW, D24CW	2 500	18-10	5
CAP(R/L) 43B...x2/C24C, D24C	2 500	33-24	9
CAP(R/L) 43B...x4/C24C, D24C	1 500	65-50	9
CAP(R/L) 43B...x4/C24CW, D24CW	1 500	34-24	5

Control unit CAED ANR*

- Compact potentiometer control unit
- Supply voltage 24 VDC
- Electronic overload protection, factory pre-set at 5 A or 9 A
- LED indication for overload cut out
- Easy installation, all connections made at front screw terminal



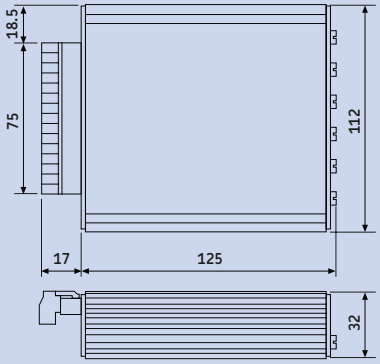

Selection

Select cut out level according to respective actuators (i.e. the current draw at desired load limit).

Technical data	
Supply voltage:	Nom. 24 VDC (22-28 VDC)
Fuse:	Max. 10 A (slow)
Input:	See ordering key
Impedance:	> 100 kΩ
Position accuracy:	3 % typically
Repeatability:	0,5 % typically
Aluminium profile housing:	IP40
Operating temperature:	0 to +50 °C

* Not suitable for actuators with brake motors.

Build your own CAT actuator with potentiometer

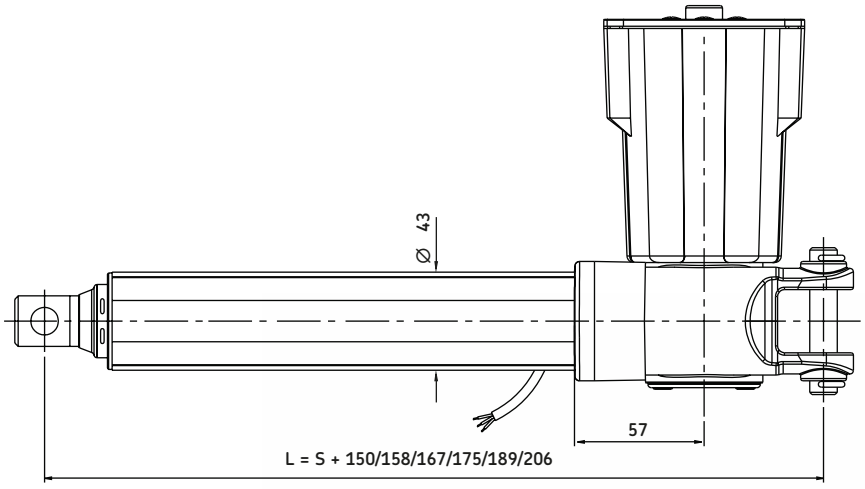

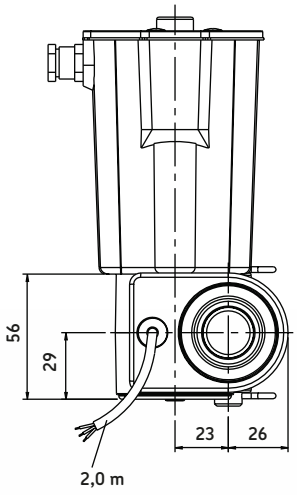

Front attachments and retracted length in mm

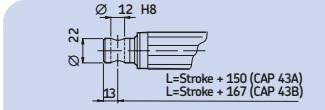	G1
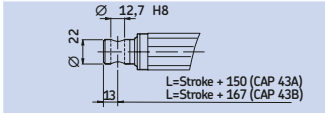	G2
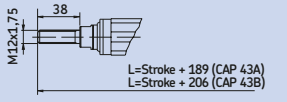	G3
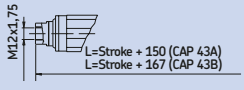	G4
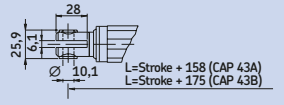	G5

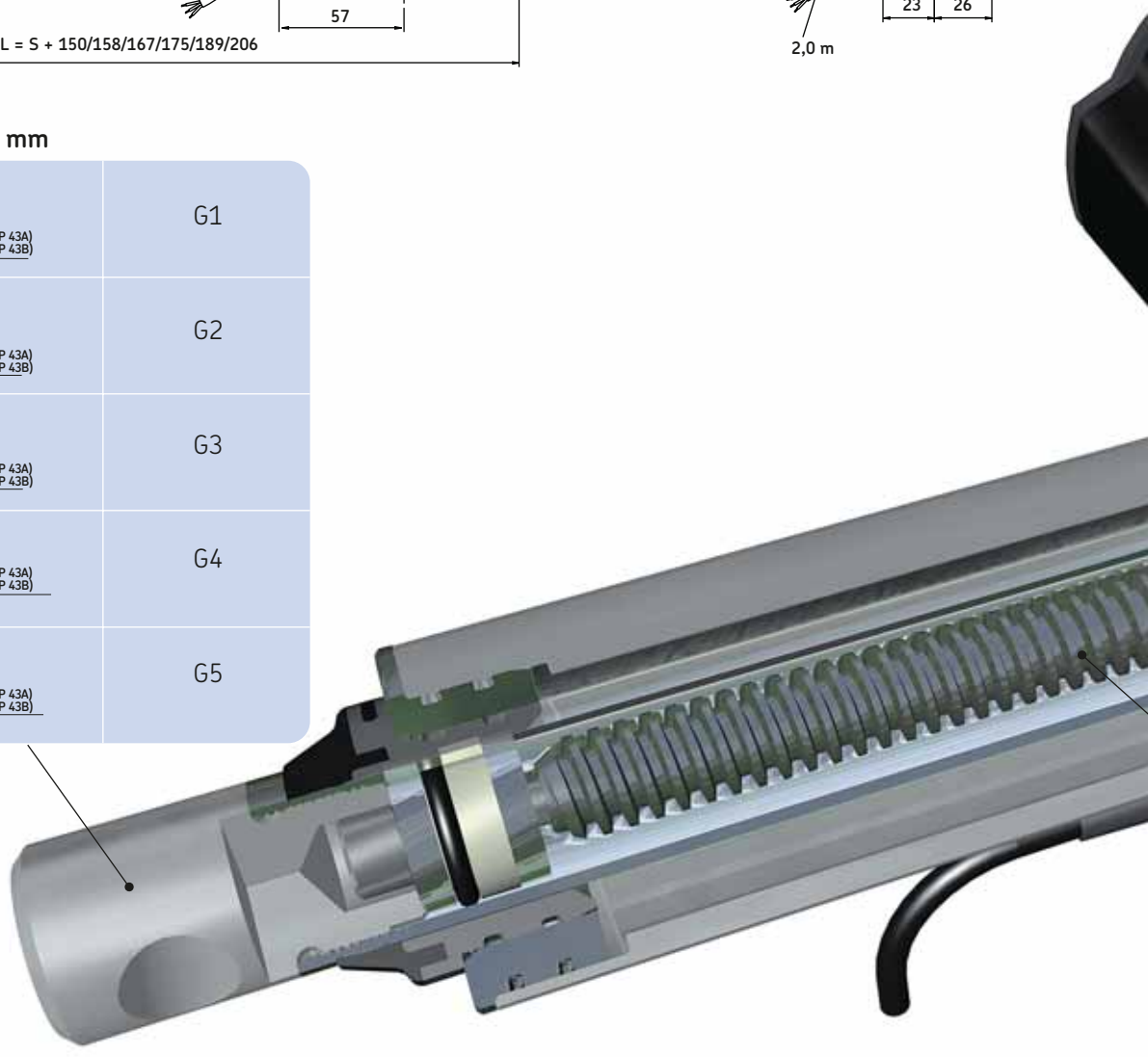

Motors

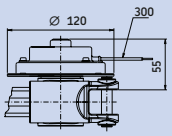	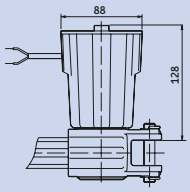
D24C D24CW	C24C C24CW

Cable

No cable	U
	T2

Rear attachments

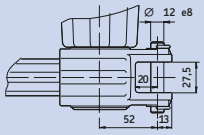	A1
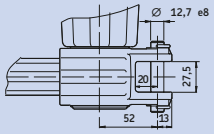	A2
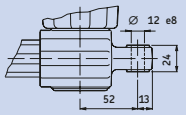	K1
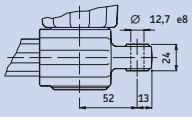	K2

Gears

No. 1	Ratio 1:25	1
No. 2	Ratio 1:12,5	2
No. 4	Ratio 1:6,25	4

Screw and protection tube

Sliding screw/ Aluminium tube	12×3 mm	CAP 43A
Ball screw/ Aluminium tube	12×4 mm	CAP 43B

Type keys

CAP 43

		Dynamic load (N)/Speed (mm/s)			24 VDC-motors, flat or cylindrical	Options
Aluminium tube Sliding screw	A	3 000/13-10	2 000/26-20	1 000/48-35	Cylindrical motor	C24C
	A	3 000/13-10	2 000/26-20	1 000/48-35	Flat motor	D24C
	A	3 000/7-5	2 000/13-8	1 000/26-19	Cylindrical motor, low speed	C24CW
	A	3 000/7-5	2 000/13-8	1 000/26-19	Flat motor, low speed	D24CW
	A	3 000/....	2 000/....	1 000/....	No motor	00000
Aluminium tube Ball screw	B	4 000/17-13	2 500/33-24	1 500/65-50	Cylindrical motor	C24C
	B	4 000/17-13	2 500/33-24	1 500/65-50	Flat motor	D24C
	B	4 000/9-5	2 500/18-10	1 500/34-24	Cylindrical motor, low speed	C24CW
	B	4 000/9-5	2 500/18-10	1 500/34-24	Flat motor, low speed	D24CW
	B	4 000/....	2 500/...	1 500/....	No motor	00000
		1	2	4		

C A P 4 3 [ ] x [ ] [ ] [ ] x [ ] [ ] [ ] [ ] [ ] / [ ] [ ] [ ] [ ] [ ] [ ] [ ] [ ]

Motor assembly
Right R
Left L

Stroke
50 mm, only 43B 050
100 mm 100
200 mm 200
300 mm 300
400 mm 400
500 mm, only 43B 500
700 mm, only 43B 700

Rear attachment
Fork ear Ø=12,0 mm A1
Fork ear Ø=12,7 mm A2
Single ear Ø=12,0 mm K1
Single ear Ø=12,7 mm K2

Front attachment
Hole Ø=12,0 mm G1
Hole Ø=12,7 mm G2
Male thread, M12x1,75 G3
Female thread, M12x1,75 G4
Fork ear, Ø=10,1 mm G5

Options
Friction clutch F
Back up ball nut (only available for version 43B) S

Options for C24C and C24CW motors
Without cable U
Cable 2 m T2

EMC filter M

Motor without cover N
IP65 (Always order motor cable when selecting IP65) I

CAED ANR

C A E D A N R [ ] - 2 4 R - P O

Current limit
5A 5
9A 9

Notes

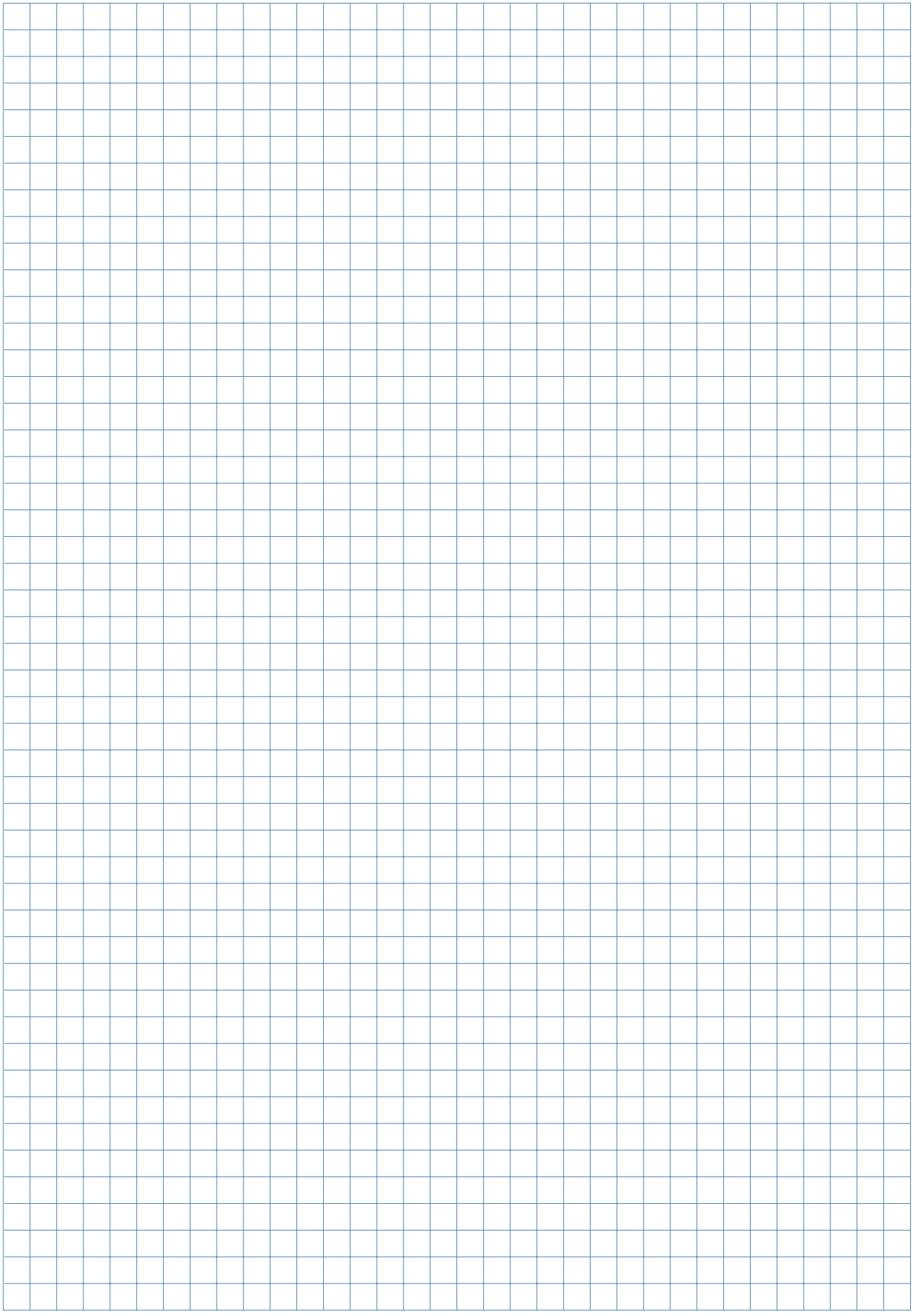

Notes



Notes









Contacts

Linear motion from SKF
www.linearmotion.skf.com

Benelux
SKF Multitec Benelux B.V.
Nederland
Tel +31 030 6029 029
Fax +31 030 6029 028

België & Luxembourg
Tel +32 25 024 270
Fax +32 25 027 336
E-mail multitec_benelux@skf.com

Brasil
SKF do Brasil Ltda
Tel +55 11 461 991 114
Fax +55 11 461 991 99
E-mail marketing.skf@skf.com.br

Canada
SKF Canada Limited
Tel +1 416 299 1220
Fax +1 416 299 6548
E-mail www.marketing@skf.ca

Danmark
SKF Multitec
Tel +45 65 92 77 77
Fax +45 65 92 74 77
E-mail customerservice.multitec@skf.com

Deutschland
SKF Linearsysteme GmbH
Tel +49 9721 657 232/233
Fax +49 9721 657 111
E-mail lin.sales@skf.com

Magnetic Elektromotoren GmbH
Tel +49 7622 695 0
Fax +49 7622 695 101
E-mail magnetic.germany@skf.com

España & Portugal
SKF Productos Industriales S.A.
Tel +34 93 377 99 07/-77
Fax +34 93 474 2039/-2156
E-mail prod.ind@skf.com

France
SKF Equipements
Tel +33 1 30 12 73 00
Fax +33 1 30 12 69 09
E-mail equipements.france@skf.com

Italia
SKF Multitec S.p.A.
Tel +39 011 22 49 01
Fax +39 011 22 49 233
E-mail multitec.italy@skf.com

Mexico
SKF de México S.A. de C.V
Tel +52 222 229 4900
Fax +52 222 229 4908
Web www.skf.com.mx

Norge
SKF Multitec
Tel +47 22 90 50 00
Fax +47 22 30 28 14
E-mail customerservice.multitec@skf.com

Schweiz
Magnetic Elektromotoren AG
Tel +41 52 305 02 02
Fax +41 52 305 02 05
E-mail magnetic.switzerland@skf.com

SKF LM&PT
Tel +41 44 825 81 81
Fax +41 44 825 82 82
E-mail skf.schweiz@skf.com

Suomi
SKF Multitec
Tel +358 9 615 00 850
Fax +358 9 615 00 851
E-mail multitec.nordic@skf.com

Sverige
SKF Multitec
Tel +46 42 253 500
Fax +46 42 253 545
E-mail customerservice.multitec@skf.com

U.K.
SKF (UK) Ltd
Tel +44 1582 496 735
Fax +44 1582 496 574
E-mail a&mc@skf.com

USA
SKF Motion Technologies
Tel +1 610 861 4800
Toll free +1 800 541 3624
Fax +1 610 861 4811
E-mail motiontech.usa@skf.com

Österreich
SKF Linearsysteme GmbH
Tel +49 9721 657 232/233
Fax +49 9721 657 111
E-mail: lin.sales@skf.com

Other countries
Fax +41 61 921 37 04
E-mail actuators@skf.com

Represented by:

® SKF is a registered trademark of the SKF Group.

© SKF 2007.
The contents of this publication are the copyright of the publisher and may not be reproduced (even extracts) unless prior written permission is granted. Every care has been taken to ensure the accuracy of the information contained in this publication but no liability can be accepted for any loss or damage whether direct, indirect or consequential arising out of the use of the information contained herein.

Publication **6162 EN - 0701A** Printed in Sweden